MEDENUS

Gas Pressure Regulation



Gas Pressure Regulator RS 254 / RS 255

Accessories / Options

Operating and Maintenance Instructions

EN

© 11.2023_04

Reprint prohibited!

Design of the gas pressure regulator RS

Gas- pressure regulator RS254
with integrated SSV

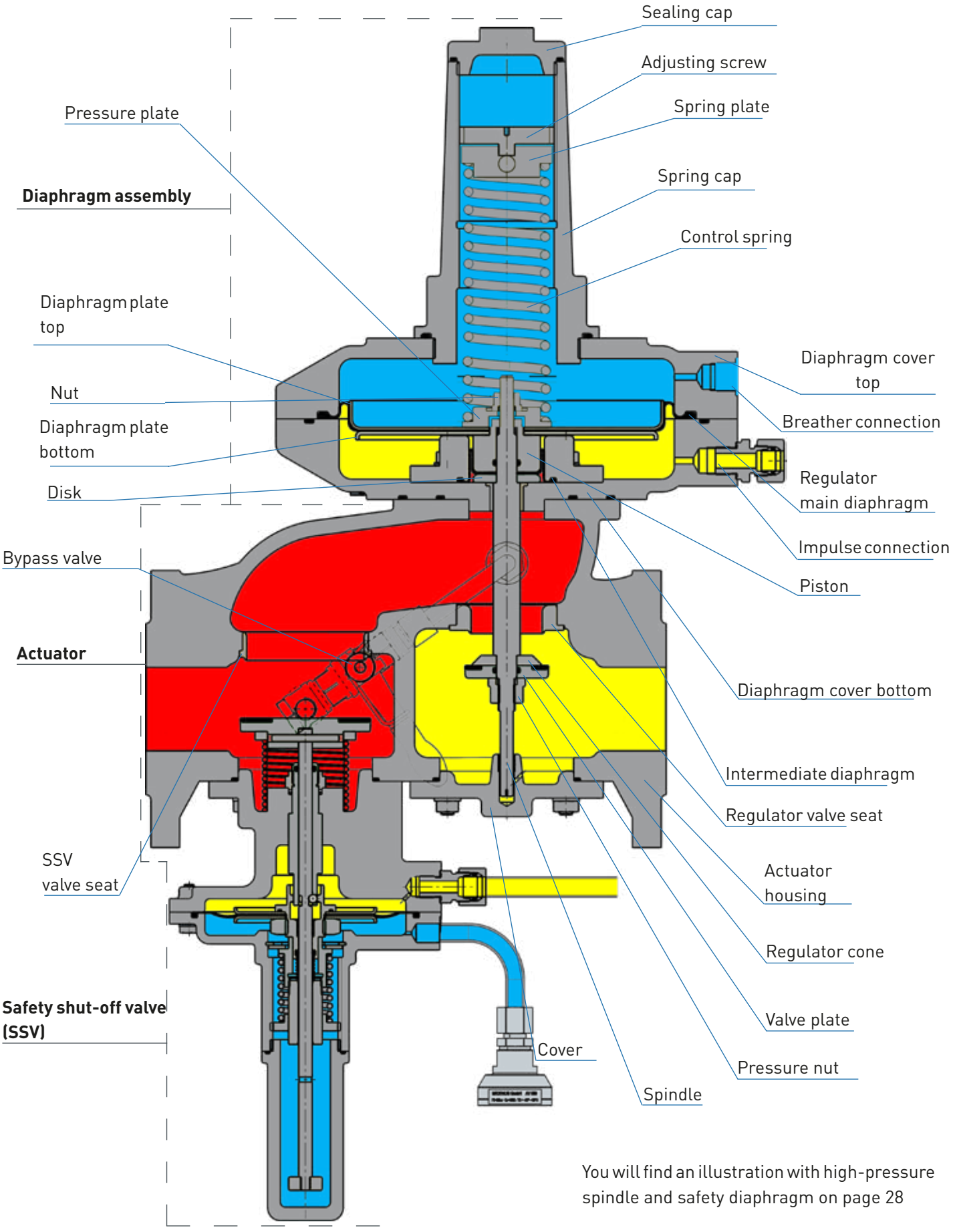

You will find an illustration with high-pressure spindle and safety diaphragm on page 28

Table of Content

1 General Information **6**
- 1.1 Warranty and Liability 6
- 1.2 Symbols, Notes 7
- 1.3 Terms, Abbreviations 7

2 Application, Characteristics **8**
- 2.1 Application 8
- 2.2 Characteristics 8
- 2.3 Types of Models (Options) 8

3 Avoidance of Foreseeable Misuse **8**

4 Safety Instructions **9**
- 4.1 Hazards of Handling the Device 9
- 4.2 Personnel Requirements 9
- 4.3 Country-Specific Requirements 9
- 4.4 Handover of the Operating and Maintenance Instructions 9
- 4.5 Safety in Operation 10
- 4.6 What to Do in Case of Danger 10

5 Responsibility of the Operator **10**

6 Transport, Storage and Packaging **11**
- 6.1 Transport 11
- 6.2 Storage 11
- 6.3 Packaging 11

7 Mounting and Commissioning **12**
- 7.1 Safety Instructions and Preparation 12
- 7.2 Mounting 12
- 7.3 Leakage Test (Test for External Leakage) 14
- 7.4 Initial Commissioning / Recommissioning 15
- 7.5 Diaphragm Assembly Setpoint Spring Table 17
- 7.6 SSV Setpoint Spring Table - Control Device 19
- 7.7 Decommissioning 21

8 Maintenance **21**
- 8.1 Maintenance Plan 21
- 8.2 Maintenance Procedure 22
- 8.3 Table of Screw Tightening Torques M_A * 23
- 8.4 Lubricants Table 23
- 8.5 Screw Retention 23

9 Troubleshooting **24**
- 9.1 Gas Pressure Regulator 24
- 9.2 Safety Shut-Off Valve 25

10 Replacement and Disposal **26**

11 Spare Parts **27**
11.1 Spare Parts Drawing RS 254 / RS 255 DN 25 - DN200 27
11.2 Optional Spare Parts Drawing 28
11.3 Parts for Maintenance Work 29
Main diaphragm and O-ring 29
Intermediate diaphragm 29
Valve plate 29
Valve Plate SSV / Diaphragm SSV 30
O-Ring and Sealing Ring Sets 30
Safety diaphragm 31

Notes **32**

12 Accessories / Options **33**
12.1 Noise Reduction 33
12.2 High-Pressure Spindle 35
12.3 AV 530 breather valve 36
12.4 RSD3 Restrictor Valve 37
12.5 Signal Transmitter / Reedcontact 38
12.6 Baffle Plate / Restrictor Plate 41
12.7. SSV manual and remote release 43
12.8. SM Safety Diaphragm 45

13 Tools **46**
13.1 Brace and bit with 4-jaw chuck 46
13.2 SSV Tightening Tool 46

12 Declaration of Conformity **47**

1 General Information

The personnel entrusted with installation, operation or maintenance of the gas pressure regulator must have completely read and understood beforehand the following documents:

- **Gas Pressure Regulator RS 254 / RS 255 Product Information**
  The product information contains technical data, dimensions and a description of the design and the mode of operation.

- **Gas Pressure Regulator RS 254 / RS 255 Operating and Maintenance Instructions**
  This document allows safe and efficient handling of the device and contains information on assembly, commissioning, maintenance, troubleshooting, and repair according to regulations.
  It is an integral part of the scope of delivery of the device, must be kept in close proximity of the device and must be readily accessible to personnel at any time.
  The basic prerequisite for safe working is compliance with all safety instructions and instructions for action given in this manual. Accordingly, the information and instructions must be observed when working on the device or on the gas line. In addition, the local occupational safety regulations and general safety regulations for the application range of the device shall apply.
  The figures in these instructions are provided for basic understanding and may differ from the actual design.
  The contents of these instructions are protected by copyright. They may be used as part of operating the device. Any other use and/or reproduction is not permitted without prior authorization by MEDENUS Gas-Druckregeltechnik GmbH.

1.1 Warranty and Liability

Claims under warranty or liability for personal injury and material damage are generally void **if** one or several of the following **conditions are not observed**:

- Work on the device during the warranty period may only be performed in consultation with the manufacturer
- Designated use of the device in accordance with the established conditions of use
- Proper installation, commissioning, operation and maintenance of the device
- Operation of the device with properly installed and functioning safety devices only
- Operating and maintenance instructions of the device or of the system
- Compliance with the maintenance instructions
- Properly performed repairs
- Supply lines without defects
- The use of original MEDENUS© spare parts and lubricants listed in these instructions
- Force majeure

It is generally prohibited

- To perform constructive modifications on the device
- To keep using the device despite the detection of a defect

© 11.2023_04

1.2 Symbols, Notes

The instructions contain safety instructions marked with symbols to indicate possible consequences in case of non-observance:

This combination of symbol and signal word indicates a potentially hazardous situation which, if not avoided, may result in minor or moderate injury, damage to the device, the breakdown of the system, and material or environmental damage.



ATTENTION

This combination of symbol and signal word indicates an imminent hazardous situation which, if not avoided, will result in death or serious injury.



DANGER

This signal word highlights useful tips, recommendations, and information for efficient and trouble-free operation.

Note

1.3 Terms, Abbreviations

Terms and abbreviations are explained below:

ATC	Acceptance test certificate
DN	Nominal width
GPR	Gas pressure regulator
HDS	High-pressure spindle
M_A	Screw tightening torque
MOP	Maximum operating pressure in a system
p_d	Outlet pressure
p_{ds}	Setpoint of the outlet pressure
SSV	Safety shut-off valve
SRV	Safety relief valve

© 11.2023_04

2 Application, Characteristics

2.1 Application

Gas pressure regulator (GDR), direct-acting (operating without auxiliary power), for systems acc. to DVGW work sheets G 491 (A) and G 600 (A) (TRGI)
Particularly suitable for dynamic regulation sections (e.g. gas fireplaces, natural gas supply systems, burner circuits, gas motor operation)
Can be used as an equipment component on gas consumption facilities as defined in Regulation (EU) 2016/426.
Can be used for the gases defined in DVGW work sheet G 260 / G 262 and neutral non-aggressive gases. (other gases on request)

2.2 Characteristics

- Integral pressure-tight model (IS)
- Gas pressure regulator with integrated SSV
- Easy maintenance through replaceable SSV functional units (modular design)
- SSV functional class, optionally A or B
- Open-air model

2.3 Types of Models (Options)

- Oxygen model
- Without SSV
- Noise reduction
- SSV manual release
- SSV electromagnetic remote release when power is applied or in case of power failure
- Electric position indicator SSV "Closed" via inductive proximity initiator or via Reed contact
- Diaphragm assembly with integrated leakage gas quantities SRV or safety diaphragm
- AV 530 breather valve (SSV diaphragm rupture protection)
- Throttle valve (RSD3) for impulse line of the regulator
- Coating with epoxy resin in RAL colours

3 Avoidance of Foreseeable Misuse

- The regulators must not be used to control liquids.
- The regulators must not be used in temperature ranges below -20 °C or above 60 °C.
- The regulators must not be used for pressure ranges higher than the pressure "PS" indicated on the nameplate.

- The regulators may only be used for the gases specified under item 2.1 Application in these operating instructions.

  Other gases, such as oxygen or hydrogen, must be explicitly stated on the nameplate.
  Please consult the manufacturer before use.
- The regulators must not be used in high-temperature areas (HTB) without an upstream HTB fuse.

© 11.2023_04

4 Safety Instructions

National accident prevention regulations and the system operator's safety regulations are not superseded by these operating and maintenance instructions and must be taken into consideration with priority (in Germany, see, among others, DVGW work sheets G 600, G 459/II, G 491 and G 495).

When performing work on the device, the current general and specific safety regulations must be observed.
The application limits of the device with respect to the medium, operating pressure and operating temperature can be found on the nameplate affixed to the device or on the acceptance test certificate.
Using the device under different operating conditions must be agreed upon in consultation with
MEDENUS Gas-Druckregeltechnik GmbH.

The mechanical components of the device do not have any potential ignition sources of their own nor any hot surfaces and are thus not covered by the scope of ATEX 2014/34/EU. The electronic accessories used comply with the ATEX requirements.

4.1 Hazards of Handling the Device

MEDENUS© devices conform with current standards and directives, the recognized technical rules
and the recognized safety rules.

However, improper use can result in hazards to the user or to third parties. This can also result in damage to the device or to the system.

This is why the device may only be used:

- in accordance with its designated use
- in perfect condition
- while observing the notes given in these operating and maintenance instructions, and inspection and maintenance regulations, which apply to the functioning and safety of the overall system.

Malfunctions or faults must be eliminated immediately.

4.2 Personnel Requirements

The device may only be mounted by qualified personnel.
Only authorized personnel with the required qualification is allowed to perform settings or repairs on the device.

4.3 Country-Specific Requirements

The rules and regulations applicable at the place of use with respect to

- gas lines, installation of the gas system
- gas supply
- work on the gas system
- accident prevention

must be observed and complied with

4.4 Handover of the Operating and Maintenance Instructions

The supplier of the system shall hand over these operating and maintenance instructions to the operator of the system no later than during commissioning and training
of the operating personnel with the reminder to carefully store these instructions.

© 11.2023_04

4.5 Safety in Operation

The device may only be used when all protective devices on the device or in the system are fully functional.
The device must be inspected by a representative of the manufacturer or by a qualified person for externally visible damage and for proper functioning at least once a year.
A more frequent inspection may become necessary, depending on the system conditions.

4.6 What to Do in Case of Danger

Information on what is to be done in case of danger and in case of accidents can be found in the respective operator's or specialist companies' work instructions.

5 Responsibility of the Operator

Operator

An operator is a person who operates the device himself/herself for commercial or economic purposes or leaves it to a third party for use/application and is legally responsible for the safety of the user, the personnel or third parties during operation.

Operator duties

The device is used in the commercial sector. The operator of the device is therefore subject to the legal obligations for occupational safety. In addition to the safety instructions contained in these instructions, the established maintenance intervals must be observed, taking into account the respective national standard (alarm and hazard prevention plan).

In particular, the following applies:

- The operator is obliged to perform work on MEDENUS© devices during the warranty period only after consultation with the manufacturer. Otherwise the claims under warranty will become void.
- The operator must obtain information on the current occupational safety regulations and determine additional hazards resulting from the special work conditions at the place of use of the device in a risk assessment. The operator must implement the results in the form of operating instructions for the device.
- During the entire time of use of the device, the operator must check whether the operating instructions issued by him/her conform to the current state of the regulations and, if necessary, adapt them.
- The operator must clearly regulate and define the responsibilities for installation, operation, troubleshooting, maintenance and cleaning.
- The operator must ensure that all persons handling the device have read and understood these instructions. In addition, the operator must train the personnel at regular intervals and inform them about the hazards.
- The operator must make available to the personnel the required protective equipment and oblige them to wear the required protective equipment.
- Moreover, the operator is responsible for the device always being in technically perfect condition.

Therefore, the following applies:

- The operator must make sure that the maintenance intervals described in these instructions are observed.
- The operator must have all safety devices checked regularly for functionality and completeness.

© 11.2023_04

6 Transport, Storage and Packaging

6.1 Transport

Note

The device is delivered with flange protection caps. They must be removed prior to installation.
Make sure that the device is transported horizontally using suitable lifting gear. The device must be handled carefully and secured against impacts and knocks.
In case of transport damage, we will require the following information from the nameplate affixed to the device:

- Device type
- Device model
- Year of construction/fabrication number

6.2 Storage

Equipment and spare parts must be stored under the following conditions:

- Do not store outdoors.
- Store in a dry and dust-free location.
- Store on a flat surface.
- Do not expose to aggressive media.
- Do not expose to ozone or ionizing radiation.
- Do not store adjacent to direct heat sources.
- Avoid mechanical vibrations.
- Storage temperature: 0 to 25 °C.
- Relative air humidity: < 55 %.

Spare parts:

- Components susceptible to corrosion must be provided with a suitable preservative.
- Do not store O-rings and seals for more than 5 years even if stored properly.
- Spare parts must be stored in their original packaging until use.

Storage period for devices:

- Storage of the device for up to one year:
  Store the gas pressure regulator in its original packaging and original condition at the time of supply. All protective caps of the device must remain mounted.
- Storage of the device for more than 1 year (e.g. as a spare device):
  Store the device in its original packaging and its original condition as delivered and check it for damage once a year. Check the housing surface for dirt, damage and corrosion. If necessary, clean all external parts. After 5 years, all O-rings and seals must be replaced.

6.3 Packaging

- The individual packaged items have been packaged in view of the transport conditions to be expected.
- The symbols on the packaging must be observed during transport and storage.
- Only environmentally friendly materials have been used for packaging.
- The packaging is designed for protecting the individual components from transport damage, corrosion and other damage until mounting. This is why the packaging must not be destroyed and only removed just prior to mounting.

© 11.2023_04

7 Mounting and Commissioning

7.1 Safety Instructions and Preparation

Prior to starting work on pressurized components:

DANGER



- Close all connections to the gas line.
- Depressurize all pressurized components. Also discharge residual energies.
- Defective components charged with pressure in operation must be replaced immediately by an appropriate expert.

Prior to starting work, ensure sufficient clearance for mounting.
Before installing the device, check whether the performance data (nameplate) and the scope of delivery coincide with the order or the system data, i.e., make sure that the provided devices are suitable for their intended purpose. In particular, the inlet pressure of the system must be lower than the maximum allowable pressure of the device.

Note

Direct contact of gas valves and fittings, i.e., the control system, with hardening masonry, concrete walls or floors is not permitted. Provide suitable supports, working materials and protective equipment.
The minimum distances to the masonry etc. must be carried out in acc. with DVGW worksheets G491 / G600.

Note

Before installing the device in the pipeline, check whether a shut-off device that interrupts the gas flow supply to the device has been mounted upstream and downstream of the device to be installed.
Prior to commissioning, make sure that all installation work has been carried out and completed in accordance with the data and information given in these instructions and that no unauthorized persons stay in the danger zone.
Important information:
If a safety relief valve SL10 is used, the switching point of the SRV must be approx. 20% below the switching point of the SSV. (Configuration, see p. 20)

DANGER



Note

7.2 Mounting

- Remove the packaging, flange protection caps and shipping braces.
- Check the device for wear and damage.

Note

- Make sure that the device is installed free of stress (see DVGW info gas no. 19).
  Make sure to observe the direction of flow i.e., the arrow on the housing must point in the direction of flow.

Note

Note

- All breather lines (items 7.04 / 7.07) must be vented to the outside atmosphere.

Tightening torques M_A*)

Gas pressure regulators		Flange tightening torques	
Screw size	Screw tightening torque M_A	Screw size	Screw tightening torque M_A
M6	8 Nm	M12	60 Nm
M8	18 Nm	M16	120 Nm
M10	36 Nm	M20	190 Nm
M12	62 Nm		

*) For the assembly of the flange connections, the maximum torques specified by the flange and gasket manufacturers must be observed. The values given here are maximum values in relation to the fitting.

© 11.2023_04

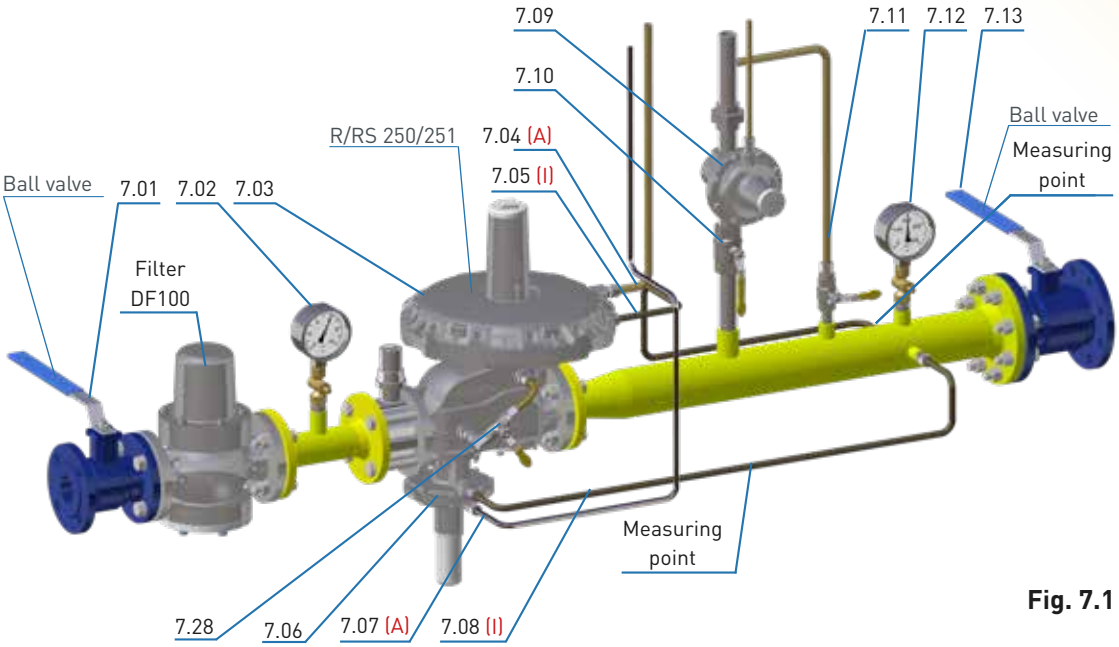

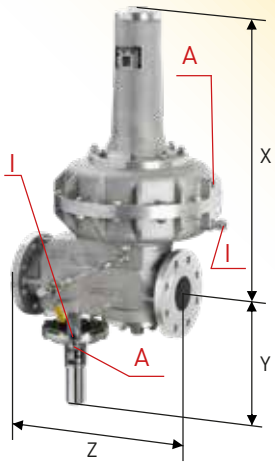

Fig. 7.1

- Breather lines (items 7.04 / 7.07) may not be required if breather valves or safety diaphragms are being used.
- The measuring lines (items 7.05 / 7.08) must be connected in a pipeline section with a steady flow. There must be no installations that cause flow interference such as shutters, expansions, manifolds, junctions, isolation valves etc. directly upstream and downstream of the measurement point.
- The maximum flow rate at the measuring point must not exceed 25 m/s, depending on the system conditions.
- The maximum flow rate at the measuring point must not exceed 25 m/s, depending on the system conditions.
- In certain system circuits, such as gas control systems for gas motors and in gas burners, higher flow rates than 25 m/s are also possible. Please contact us.
- The measuring line must be connected to the pipeline or to the measuring point separately, laterally or at the top for each device (1 gas pressure regulator (item 7.03); 1 integrated SSV (item 7.06)).
- The SSV measuring line (item 7.08) must always be connected upstream of the first shut-off valve (item 7.13) on the outlet side in such a way that it cannot be shut off.
- The SSV (item 7.06) can be rotated to any position.

Connection

Nennweite / nominal size		Abmessung / dimension (mm)			Anschluss Regler / connection Regulator		Anschluss Regler Öffnungsdurchmesser / connection Regulator opening diameter (mm)							Anschluss SAV / connection SSV		Anschluss SAV Öffnungs-durchmesser / connection SSV opening diameter (mm)	
							Impulsleitung / impulse line (I) Atmungsleitung / breathing line (A)										
							Diaphragm cover Ø										
	DN	X	Y	Z	Impuls-leitung / impulse line (I)	Atmungs-leitung / breathing line (A)	160	205	275	330	385	390	485	Impuls-leitung / impulse line (I)	Atmungs-leitung / breathing line (A)	Impuls-leitung / impulse line (I)	Atmungs-leitung / breathing line (A)
RS254	25	328	269	230	RP 3/8"	RP 3/8"	3		4		6		8	RP 1/4"	RP 1/4"	2	3
	50	348	282	230										RP 1/4"	RP 1/4"	2	3
	80	406	305	310										RP 1/4"	RP 1/4"	2	3
	100	421	315	350										RP 1/4"	RP 1/4"	2	3
	150	716	386	480										RP 3/8"	RP 3/8"	4	2
	200	784.5	400	600										RP 3/8"	RP 3/8"	4	2
RS255	50	406	305	310										RP 1/4"	RP 1/4"	2	3
	80	644	311	410										RP 1/4"	RP 1/4"	2	3
	100	716	386	480										RP 3/8"	RP 3/8"	4	2

© 11.2023_04

7.3 Leakage Test (Test for External Leakage)

The devices are subjected to a strength and leakage test ex works at MEDENUS Gas-Druckregeltechnik GmbH.

The leakage test in the fully assembled system must be performed prior to commissioning and following maintenance work.
For the external leakage test in the fully assembled system, the following applies:

For Germany:
According to DVGW work sheet G 491, the fully assembled system must be subjected to a leakage test with air or an inert gas at the installation site, using 1.1 times the maximum operating pressure of the system (MOP).
An exception is the room between the actuator and the first shut-off valve on the outlet side. This room must be checked using the test pressure corresponding to the maximum permissible pressure in the system in case of a malfunction (1.1 MOP_d). In this test, all detachable connections must be checked using a foaming agent.

In direct-acting devices (without power supply), the outlet pressure acting on the actuator (limited by the SSV) should not be more than 0.5 bar above the set setpoint. This should be taken into account when specifying the response pressure of the upstream SSVs.
(Configuration, see p. 20)

Note

For other countries:
The relevant national and international standards shall apply.

Procedure

- Close the ball valve upstream of the valves and fittings (item 7.01).
- Close the downstream shut-off devices (item 7.13) (ball valve, solenoid or pneumatic valve).
- Depressurize the system (item 7.11).
- If there is a SRV (safety relief valve) in the controlled section and the test pressure is higher than the relief pressure of the SRV (item 7.09), the line upstream of the SRV (item 7.10) must be closed.
- Always increase the test pressure slowly and steadily.

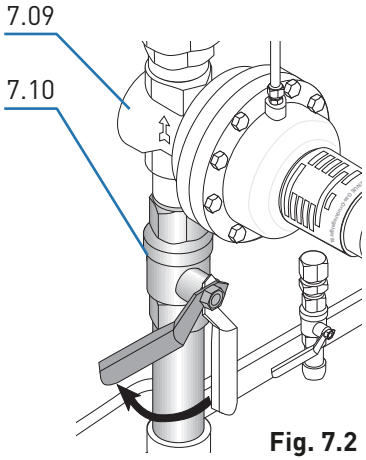

Fig. 7.2

Note

While doing so, you must ensure:
Pressure in outlet chamber (item 7.12) ≤ pressure in inlet chamber (item 7.02)
Pressure build-up always from the inlet side (inlet chamber)
Pressure reduction always from the outlet side (outlet chamber)

- After leakage test:
  Open the ball valve in the SRV line (item 7.10) again.

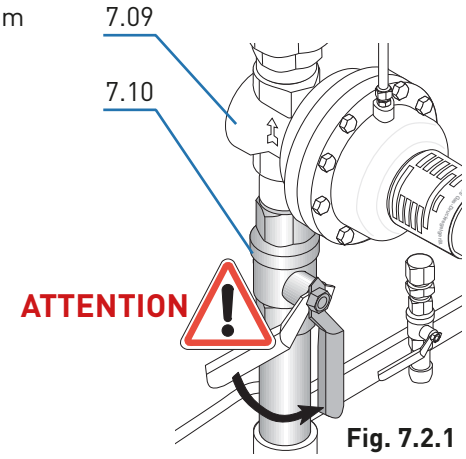

Fig. 7.2.1

© 11.2023_04

7.4 Initial Commissioning / Recommissioning

Initial commissioning of the system components shall be carried out by the operator. For commissioning, please refer to the documents listed under item 1 "General Information" and the system operator's work instruction.
The devices delivered by MEDENUS Gas-Druckregeltechnik GmbH are factory-set to the operating data specified by the customer. This data is listed on the Acceptance Test Certificate (ATC)* and the type plate.

Note Prior to commissioning of the system, a functional test must be performed on the gas pressure regulator (GPR), if applicable, and the safety shut-off and safety relief valves.

Procedure (fig. 7.1)

- Close the ball valve upstream of the valves and fittings (item 7.01).
- Close the downstream shut-off devices (item 7.13) (ball valve, solenoid or pneumatic valve).
- Depressurize the system (item 7.11).
- Close the venting ball valve (item 7.11).
- Slowly open ball valve upstream of the valves and fittings (item 7.01) (pressure increase approx. 0.5 bar/s).

Note If the inlet shut-off device is equipped with a bypass, the latter must be slowly opened for pressure compensation as step 1. This is followed by slowly opening the inlet shut-off valve which will close the bypass. The same is true of the outlet shut-off valve.

- Check the inner leakage of the SSV (item 7.06) by reading the pressure gauge installed downstream of the GPR (item 7.12).
- Unscrew the sealing cap (item 7.15) of the safety shut-off valve (SSV).
- Perform pressure compensation via the SSV by pulling at the pull knob (item 7.14) and allow the SSV to engage. On a GPR with bypass ball valve (item 7.28), open the ball valve (item 7.28) while pulling the pull knob (item 7.14) until the SSV engages to perform pressure compensation. In some versions, the sealing cap is used as a pulling aid to reactivate the SSV. (Fig. 7.3.1)
- A closing pressure corresponding to the set value is established on the GPR.
- Testing the response pressure of the SSV by slowly increasing or decreasing the output pressure to response pressure.
- It may be necessary to correct the setpoint values of the response pressures. This is done by turning the SSV setpoint setting screws (items 7.17 / 7.19) to the right (pressure increase) or left (pressure decrease) in order to increase/ decrease the setpoint value.

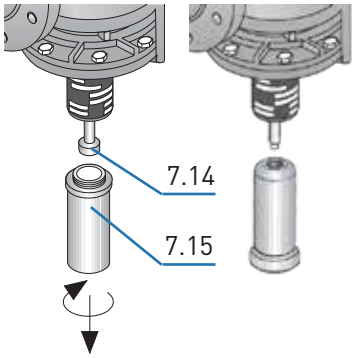

Fig. 7.3 Fig. 7.3.1

Note The inner setting screw (item 7.17) sets the underpressure shut-off level (lower trigger level) and the outer setting screw (item 7.19) sets the upper trigger level.

- Perform pressure compensation via the SSV again by pulling the pull knob (item 7.14) and allowing the SSV to engage.

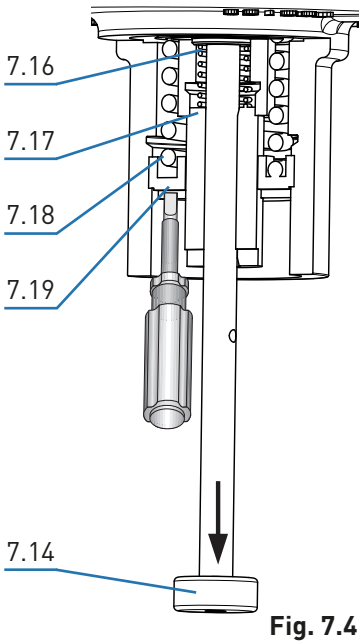

Fig. 7.4

*) Acceptance Test Certificate (ATC) available optionally

© 11.2023_04

- For the functional test of the GPR, let gas flow via the discharge line (venting) (item 7.11) to the outside atmosphere and read the set regulating pressure on the outlet pressure gauge (item 7.12).
- It may be necessary to correct the setpoint of the outlet pressure.
  This is done by turning the GPR setpoint setting screw (item 7.22) to the right or left, in order to increase and decrease the setpoint, respectively, after removal of the GPR sealing cap (item 7.21).
- After closing the discharge line (item 7.11), a constant closing pressure within the closing pressure class can be read on the outlet pressure gauge (item 7.12).
- Slowly open the shut-off valve (item 7.13), close the discharge line (item 7.11) and read the set regulating pressure on the outlet pressure gauge (item 7.12).
- It may be necessary to correct the setpoint of the outlet pressure once again.
- Screw on the sealing cap (item 7.15) of the safety shut-off valve (SSV) again.
- Screw on the GPR sealing cap (item 7.21) again.

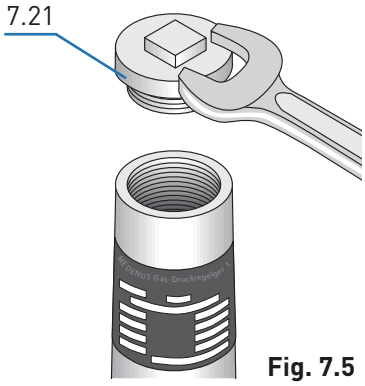

Fig. 7.5

Changing the control range

Switching to the control range of a different setpoint spring can be done for the SSV as well as for the GPR while the device is pressurized.

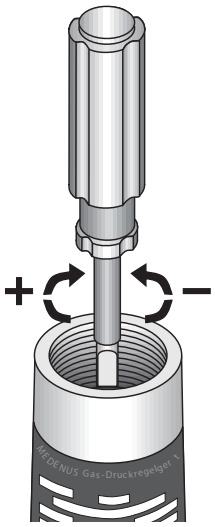

Fig. 7.6

Gas pressure regulator

- Take off the sealing cap (item 7.21) and unscrew the setting screw (item 7.22),
- Pull out the spring plate (item 7.24) with ball (item 7.23) and spring (item 7.25) and replace the spring with one that fits.
- Screw in the spring plate (item 7.24), the ball (item 7.23) and the setting screw (item 7.22) again.
- Set the desired setpoint and screw on the sealing cap (item 7.21).

Safety shut-off valve

- Remove the sealing cap (item 7.15) and screw off the pull knob (item 7.14) for changing the spring of the underpressure shut-off device (item 7.16).
- Screw off the corresponding setting screw (items 7.17 / 7.19) for the upper or lower trigger level.
- Pull out the spring (item 7.16 / 7.18) and replace it with one that fits.
- Screw in the setting screw (item 7.17 / 7.19) again and fasten the pull knob (item 7.14) on the spindle again.
- Set the desired setpoint and screw on the sealing cap (item 7.15).

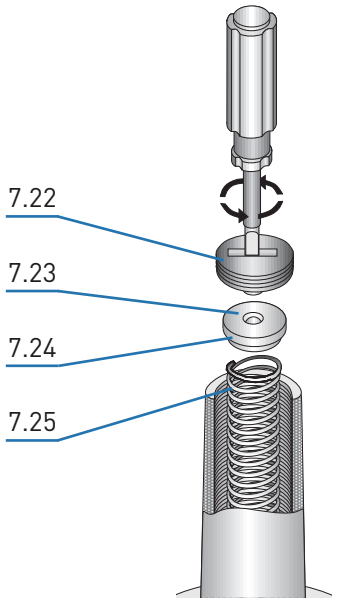

Fig. 7.7

The SSV closes if the overpressure setpoint spring (upper trigger level) is removed from a pressurized system.

Note

© 11.2023_04

7.5 Diaphragm Assembly Setpoint Spring Table

Spring data		Specific command range W_{ds} [mbar]			
Spring no.	Color [RAL]	RE 205	RE 275	RE 330	RE 390
FA 04	4002	-	-	18 - 22	-
FA 05	7037	-	-	21 - 29	-
FA 06	9005	-	-	28 - 39	18 - 24
FA 07	3020	-	-	38 - 54	23 - 32
FA 08	9010	-	-	53 - 77	31 - 45
FA 09	7016	200 - 295	-	76 - 111	42 - 64
FA 10	6010	280 - 430	130 - 225	110 - 166	59 - 94
FA 11	2002	419 - 653	208 - 339	165 - 250	88 - 142
FA 12*	7035	595 - 935	293 - 450	239 - 361	124 - 203
FA 13*	5010	819 - 1408	436 - 726	360 - 544	185 - 305
FA 14*	1028	1245 - 1976	607 - 1017	506 - 765	258 - 428
FA 15*	6018	1212 - 2553	699 - 1100	535 - 800	297 - 450
FA 16*	3020	1330 - 3000	-	-	-

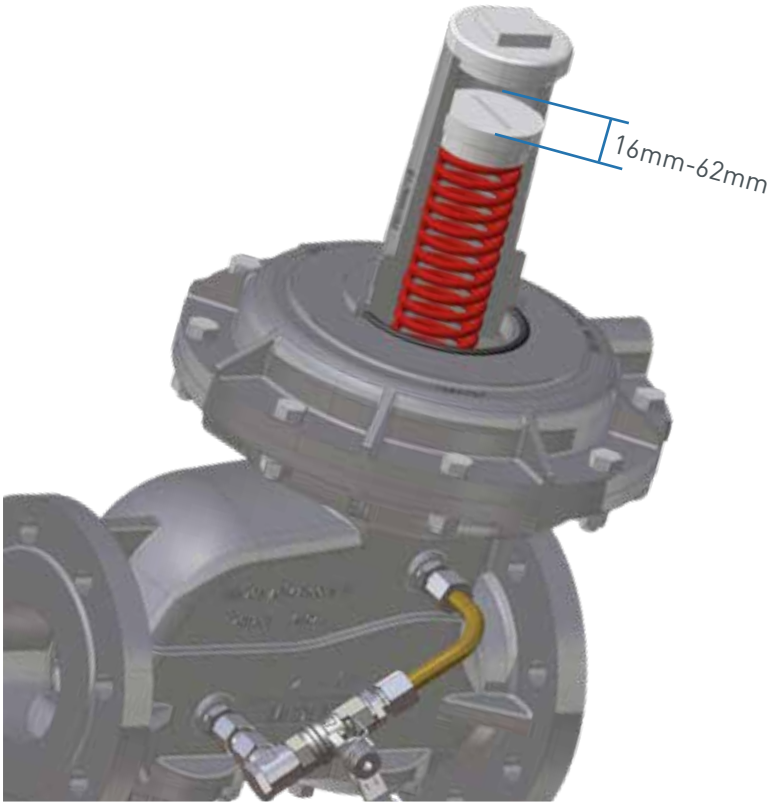

FA spring series for RS254 DN 025 - DN 100 and RS255 DN 050

shown RS254 DN 080 with FA11

*) with high-pressure screw spindle (HDS shown on p.25)

© 11.2023_04

Spring data		Specific command range W_{ds} [mbar]		
Spring no.	Color [RAL]	RE 275-2	RE 385	RE 485
FB 701	6018	-	-	18 - 22
FB 702	9006	-	-	21 - 25
FB 703	5015	-	-	24 - 31
FB 704	4002	-	-	28 - 36
FB 705	7037	-	-	33 - 44
FB 706	9005	-	-	41 - 56
FB 707	3020	-	-	51 - 71
FB 708	9010	-	150 - 167	65 - 94
FB 709	7016	350 - 450	165 - 215	82 - 118
FB 710	6010	397 - 596	212 - 285	105 - 155
FB 711	2002	542 - 814	280 - 390	140 - 209
FB 712	7035	742 - 1078	385 - 520	188 - 275
FB 713*	5010	977 - 1442	515 - 671	246 - 369
FB 714*	1028	1245 - 1878	661 - 850	311 - 450
FB 715*	6018	1547 - 2469	-	-
FB 716*	3020	2136 - 3000	-	-

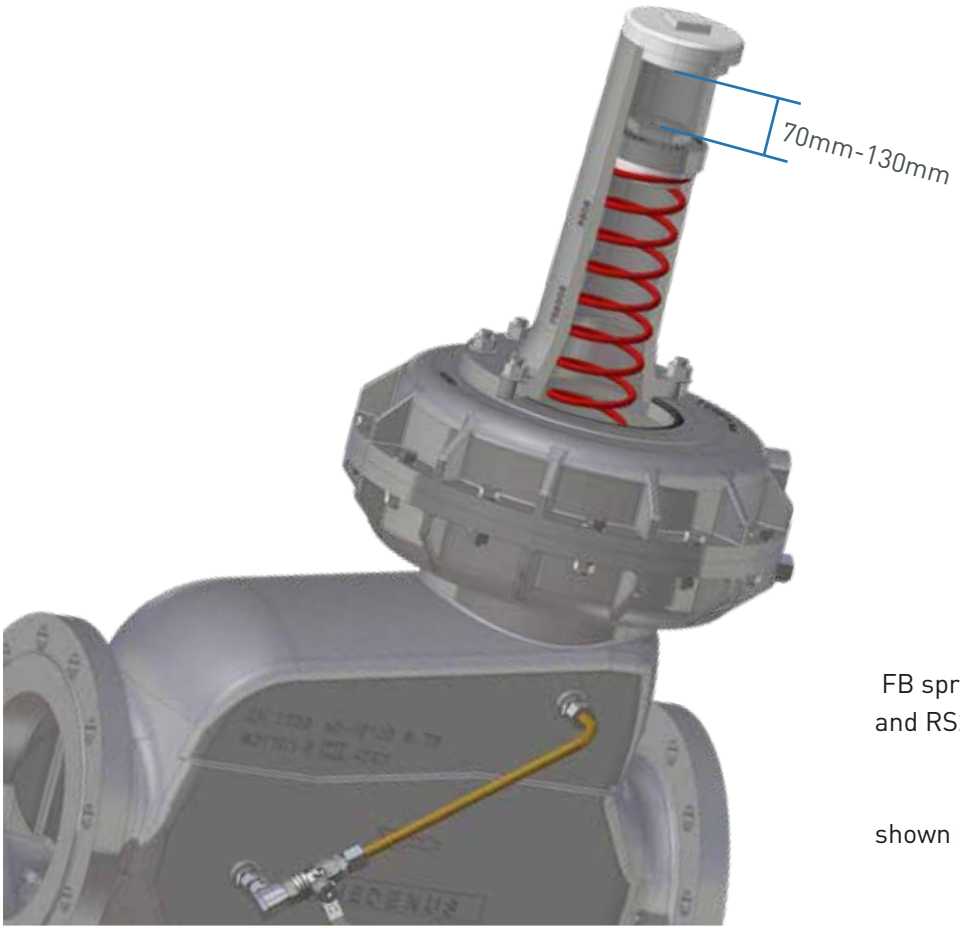

FB spring series for RS254 DN 150 - DN 200 and RS255 DN 080 - DN 100

shown RS254 DN 200 with FB707

© 11.2023_04

7.6 SSV Setpoint Spring Table - Control Device

		RS 254: DN 25 - 100 / RS 255: DN 50 - 80							
		small ball lock							
		ND				MD			
		to $W_{ds\,o}$ 200mbar				to $W_{ds\,o}$ 300mbar			
Spring data		Lower response pressure		Upper response pressure		Lower response pressure		Upper response pressure	
Feder Nr.	Farbe [RAL]	$W_{ds\,u}$ [mbar]	Δp_{wu} [mbar]	$W_{ds\,o}$ [mbar]	Δp_{wo} ** [mbar]	$W_{ds\,u}$ [mbar]	Δp_{wu} [mbar]	$W_{ds\,o}$ [mbar]	Δp_{wo} ** [mbar]
FE 900	1028								
FE 901 VA	2002								
FE 902 VA	6010	3 - 7	15			0 - 12*	40		
FE 903	5015	5 - 9	15			4 - 14	40		
FE 904 VA	9005	7 - 13	15			8 - 18	40		
FE 905 VA	9010	13 - 25	15			18 - 42	40		
FE 906	4002					48 - 70	40		
FD 910	1028							35 - 45	40
FD 911	2002			25 - 33	15			45 - 80	40
FD 912	6010			33 - 56	15			70 - 120	40
FD 913	5015			54 - 85	15			100 - 170	40
FD 914	9005			85 - 119	15			140 - 230	40
FD 915	9010			100 - 176	15			210 - 300	40
FD 916	3020			152 - 200	15				
FD 917	5010								
FD 918	9006								
FD 919	4002								

		RS 254: DN 25 - 100 / RS 255: DN 50 - 80							
		small ball lock							
		MD-R				HD			
		to $W_{ds\,o}$ 3500mbar				to $W_{ds\,o}$ 16000mbar			
Spring data		Lower response pressure		Upper response pressure		Lower response pressure		Upper response pressure	
Feder Nr.	Farbe [RAL]	$W_{ds\,u}$ [mbar]	Δp_{wu} [mbar]	$W_{ds\,o}$ [mbar]	Δp_{wo} ** [mbar]	$W_{ds\,u}$ [mbar]	Δp_{wu} [mbar]	$W_{ds\,o}$ [mbar]	Δp_{wo} ** [mbar]
FE 900	1028								
FE 901 VA	2002					20 - 120*	500		
FE 902 VA	6010	24 - 74	90			120 - 310*	500		
FE 903	5015	36 - 78	90			160 - 316	500		
FE 904 VA	9005	58 - 110	90			200 - 400	500		
FE 905 VA	9010	110 - 160	90			416 - 650	500		
FE 906	4002	162 - 250	90			560 - 940	500		
FD 910	1028			100 - 135	50				
FD 911	2002			130 - 250	50				
FD 912	6010			220 - 360	50				
FD 913	5015			320 - 510	50				
FD 914	9005			440 - 700	50				
FD 915	9010			630 - 1130	50			2200 - 4000	300
FD 916	3020			1060 - 1750	50			3400 - 4750	300
FD 917	5010			1420 - 2520	50			4700 - 7400	300
FD 918	9006			1850 - 3200	50			7200 - 12100	300
FD 919	4002			2800 - 3500	50			11700 - 16000	300

© 11.2023_04

		RS 254: DN 150 - 200 / RS 255: DN 100 large ball lock							
		ND				MD			
		to $W_{ds\,o}$ 200mbar				to $W_{ds\,o}$ 300mbar			
Spring data		Lower response pressure		Upper response pressure		Lower response pressure		Upper response pressure	
Feder Nr.	Farbe [RAL]	$W_{ds\,u}$ [mbar]	Δp_{wu} [mbar]	$W_{ds\,o}$ [mbar]	Δp_{wo} [mbar]	$W_{ds\,u}$ [mbar]	Δp_{wu} [mbar]	$W_{ds\,o}$ [mbar]	Δp_{wo} [mbar]
FM 400	1028	3 - 25	20			10 - 40*	30		
FM 402	6010					35 - 115	30		
FM 404	9005					60 - 245	30		
FL 411	2002			45 - 81	20				
FL 412	6010			62 -111	20			40 - 180	50
FL 413	5015			100 - 200	20			70 - 300	50
FL 415	9010								
FL 417	4010								

		RS 254: DN 150 - 200 / RS 255: DN 100 large ball lock							
		MD-R				HD			
		bis $W_{ds\,o}$ 3500mbar				bis $W_{ds\,o}$ 16000mbar			
Spring data		Lower response pressure		Upper response pressure		Lower response pressure		Upper response pressure	
Feder Nr.	Farbe [RAL]	$W_{ds\,u}$ [mbar]	Δp_{wu} [mbar]	$W_{ds\,o}$ [mbar]	Δp_{wo} [mbar]	$W_{ds\,u}$ [mbar]	Δp_{wu} [mbar]	$W_{ds\,o}$ [mbar]	Δp_{wo} [mbar]
FM 400	1028	20 - 180*	60			0 - 250	500		
FM 402	6010	155 - 380	60			150 - 1000*	500		
FM 404	9005	200 - 950	90			650 - 2050	500		
FL 411	2002								
FL 412	6010			145 - 670	180			380 - 1400	500
FL 413	5015			270 - 1230	180			800 - 2800	500
FL 415	9010			1200 - 3500	180			3200 - 5500	500
FL 417	4010							4500 - 16000	500

Determining the upper response pressure

Outlet pressure P_d (mbar)	Upper response pressure W_{dso} ***
≤200	P_d +100 mbar
>200 - ≤800	P_d x 1.5
>800 - ≤1600	P_d x 1.3
>1600	P_d +500 mbar

*) if possible not greater than 450 mbar

**) If the control device is set up for simultaneous monitoring of upper and lower response pressures, the difference between the setpoints for the upper and lower response pressures (p_{dso} and p_{dsu}) should be at least 10% greater than the total of values given for Δp_{wo} and Δp_{wu}.

***) The upper response pressure is rounded up to full tens, for example 251 mbar-> 260 mbar

© 11.2023_04

7.7 Decommissioning

For decommissioning, please refer to the documents listed under item 1 “General Information” and the system operator's work instruction.

Procedure (fig. 7.1)

- Slowly close the outlet shut-off valve (item 7.13) or
- Close the ball valve upstream of the valves and fittings (item 7.01).
- Depressurize the system (item 7.11).
- Close the venting ball valve (item 7.11).

8 Maintenance

8.1 Maintenance Plan

The following sections describe the maintenance work required for optimal and trouble-free operation of the device.
If increased wear is detected during regular inspections, the required maintenance intervals must be shortened in accordance with the actual wear.
For any questions on maintenance work and intervals, please contact the manufacturer.
The intervals for monitoring and maintenance work are strongly dependent on the operating situation and the condition of the gas. This is why no fixed intervals can be given. For Germany, it is recommended that the maintenance periods as specified in DVGW work sheet G 495 are observed initially. For each system, this must be followed by determining the maintenance interval independently on a medium-term basis.

During maintenance work, the components must be cleaned and subjected to a thorough visual inspection. This is also necessary if irregularities in the operating behavior have been detected during operation or during functional tests.

Damaged parts and O-rings dismounted during dismantling must be replaced with new ones.
The item numbers mentioned in chapter 11.3 (parts for maintenance work) correspond to those listed in the spare parts drawings and spare parts lists.

It is recommended to stock the parts listed in chapter 11.3 for maintenance work.

Interval	Maintenance work	Personnel
According to the data given in the DVGW work sheet G 495 or if necessary	Replacing O-rings	Qualified person
	Replacing diaphragms	
	Replacing the valve plate	

© 11.2023_04

8.2 Maintenance Procedure

The maintenance procedure is described in detail step-by-step in our video tutorial and our pictorial descriptions. Instructions for our products can be found in the download area of our website. Should you have any problems, please feel free to contact us directly.

ATTENTION



If components have been removed, make sure they are mounted correctly, reinstall all fastening elements and observe the screw tightening torques.

Prior to recommissioning, observe the following:

DANGER



- Make sure that all maintenance work has been carried out and completed in accordance with the data and information given in these instructions.
- Make sure that no unauthorized persons stay in the danger zone.
- Make sure that all covers and safety devices have been installed and are working properly.

For recommissioning, please refer to the relevant manufacturer's documentation of the gas pressure regulator installed in the system or chapter 1 and 5.4 as well as the work instructions of the system operator, and the other safety regulations for the system in which the regulator is installed.

To guarantee smooth operation, we recommend always keeping a maintenance set in reserve.

Note

© 11.2023_04

8.3 Table of Screw Tightening Torques M_A *

Item no.	Exception	RS 254 / 025 RS 254 / 050 RS 254 / 080 RS 254 / 100 RS 255 / 050	RS 254 / 150 RS 254 / 200 RS 255 / 080 RS 255 / 100
50		M8 / 18 Nm	M10 / 36 Nm
		M10 / 36 Nm	
51		M8 / 18 Nm	M10 / 36 Nm
52		M8 / 18 Nm	M10 / 36 Nm
	DN 200		M12 / 62 Nm
53		M8 / 18 Nm	M10 / 32 Nm
	DN 200		M12 / 62 Nm
54		M6 / 8 Nm	M8 / 18 Nm

Max. flange tightening torques
see p.12, chapter 7.2 Mounting

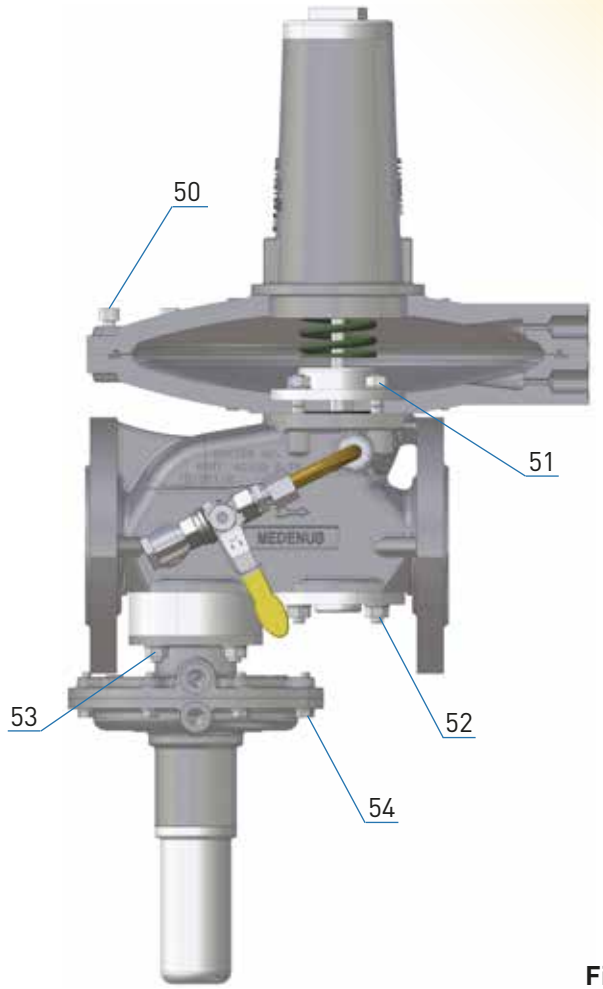

Fig. 8.1

8.4 Lubricants Table

Components (apply a thin layer)	Lubricants
All O-rings	Syntheso Proba 270
All fastening and locking screws	
Balls	

Oxygen model

ATTENTION

For oxygen models, all parts must be cleaned with oxygen cleaner.
For oxygen models, only suitable grease with approval for oxygen according to BAM-list may be used.

8.5 Screw Retention

Components (apply a thin layer)	Adhesive and sealing agent
Stud bolts	Loctite-648

*) Guide values may differ depending on the device/lubrication

© 11.2023_04

9 Troubleshooting

9.1 Gas Pressure Regulator

Description of the error	Possible cause	Elimination
Closing pressure too high No closing pressure	Actuator dirty or damaged	Check valve plate (seal) and valve seat for damage and dirt, replace valve plate, if necessary
	Static sealing elements defective	Replace O-rings
	Clamping of the compensating diaphragm has come off Compensating membrane is damaged or mounted incorrectly	Check compensating diaphragm for fastening, damage, and correct fit, replace it, if necessary
	Valve plate has become disconnected from the valve stem	Tighten nut under the valve plate
	Valve plate dirty or damaged	Clean the valve plate (use exclusively NBR-compatible cleaning agent)
Unstable outlet pressure curve (vibrations, pulsation)	Device is working in the closing pressure range	Check the regulator configuration
	Vibration resonance in the control system	Install restrictor plate in breather line Install baffle plate in measuring line (see p. 29)*. Install a stronger spring (setpoint spring of the next higher control range) Check setting of gas consumption devices Use of throttle valve RSD3 (optional accessory)
Control deviation too large / setpoint is not reached	Unfavorable connection of the measuring line	Select a measuring point with steady flow, check measuring point
	Sluggishness of the device due to dirt	Subject device to maintenance
	Main diaphragm or compensating diaphragm defective or mounted incorrectly	Check diaphragm and replace it, if necessary
	Wrong regulator size selected Wrong setpoint spring selected Wrong control cone selection	Check regulator configuration, setpoint spring / control cone and replace if necessary
	Inlet pressure supply is insufficient (pressure losses in the supply line too high)	Increase inlet pressure Check pipeline cross-section Check built-in filter
Inadmissible pressure peak Dynamic closing pressure too high	Damping of the device too high Control system too dynamic	Continue opening restrictor (throttle valve RSD3 available as an option) in measuring line by turning anticlockwise Remove restrictor plate from breather line Check breather lines and dimension them larger, if necessary. Replace breather valve with safety diaphragm or breather line
	Closing speed of downstream shut-off devices too high	Reduce closing speed of shut-off valve
Noise	Gas velocity too high	Check the regulator configuration
	Sluggishness of the device due to dirt / wear	Perform maintenance on actuator If worn-out mechanically, replace it, if necessary
Gas escapes through breather line	Fastening of the main diaphragm has come off Main diaphragm is damaged or has been mounted incorrectly	Check diaphragm for fastening, damage, and correct fit
	Internal leakage gas SRV is set too low or is not tight	Correct settings of leakage gas SRV Check O-ring for damage and dirt, replace if necessary

*) Excessive damping limits the actuation speed.
**) Normal flow noise does not constitute a fault. However, this noise can be reduced by installing a noise reduction device.

Note

© 11.2023_04

9.2 Safety Shut-Off Valve

Description of the error	Possible cause	Elimination
No internal tightness in closed position	Actuator dirty or damaged	Check valve seat and valve plate (seal) for damage and dirt
	Pressure compensation valve (internal bypass) in the actuator dirty or sealing elements damaged	Check O-rings in the pressure compensation valve or at the SSV spindle and replace them, if necessary
SSV cannot be opened	No pressure compensation at actuator	Pressure compensation by opening the bypass ball valve (item 5.28)
SSV cannot be engaged	Difference between response pressure and operating pressure or between upper and lower response pressure is too small	Correct response pressure settings consider required re-engagement differential (see RS 254 / 255 product overview)
	Only in case of underpressure switching: Diaphragm in the control device defective or incorrectly installed	Check diaphragm and replace it, if necessary
	Pressure at the measuring point too high or low (only with underpressure switching)	Lower or increase pressure at measuring point to operating value (GPR setpoint value)
	Sluggishness of the trigger mechanism due to dirt / wear	Service switching device and replace if worn-out mechanically
Permissible response pressure group is exceeded Irregularities in response behavior	Difference between response pressure and operating pressure or between upper and lower response pressure is too small	Correct response pressure settings consider required re-engagement differential (see RS 254 / 255 product overview) *
	Diaphragm in the control device incorrectly installed	Check diaphragm for irregular tension
	Sluggishness of the trigger mechanism due to dirt / wear	Service switching device and replace if worn-out mechanically
Gas escapes through breather line	Diaphragm clamping has become loose Diaphragm is damaged or has been mounted incorrectly O-ring sealing (item 35) dirty or damaged	Check diaphragm for fastening, damage, and correct fit Check O-ring and replace it, if necessary
SSV frequently shuts off	Stopcock upstream of SRV is closed	Open stopcock
	SSV set too low or SRV set too high	Check SSV and SRV settings

*) The pressure differences between GPR, SSV and system SRV must consider the response and closing pressure groups as well as the re-engagement differentials of the devices in order to avoid any unintended SSV switching.

Note

© 11.2023_04

10 Replacement and Disposal

After the device has reached the end of its useful life, it must be dismounted and disposed of in an environmentally compatible manner.
During dismounting, components that may present a risk of injury by contamination, depending on the medium, are removed. Depending on the processed medium, the components must be properly decontaminated. Diffusible components (diaphragm, O-ring, etc.) may have to be taken to a special disposal unit, depending on the medium used.

ATTENTION



If no return or disposal agreement
has been signed, dismantled components should be recycled:

- Metals should be scrapped
- The remaining components should be disposed of after sorting according to material.

Alternatively, scrapping by MEDENUS can be agreed with the service. The return is at your own expense, the disposal by MEDENUS is free of charge.

For technical information, please contact our customer service:

MEDENUS Gas-Druckregeltechnik GmbH
Im Langen Feld 3
D-57462 Olpe

Phone +49 (0) 2761 / 82788-0
Fax +49 (0) 2761 / 82788-9

E-mail service@medenus.de
Internet www.medenus.de

In addition, we are always interested in information, suggestions and experience resulting from the application and which can be valuable for improving our products.

Note

11 Spare Parts

11.1 Spare Parts Drawing RS 254 / RS 255 DN 25 - DN200

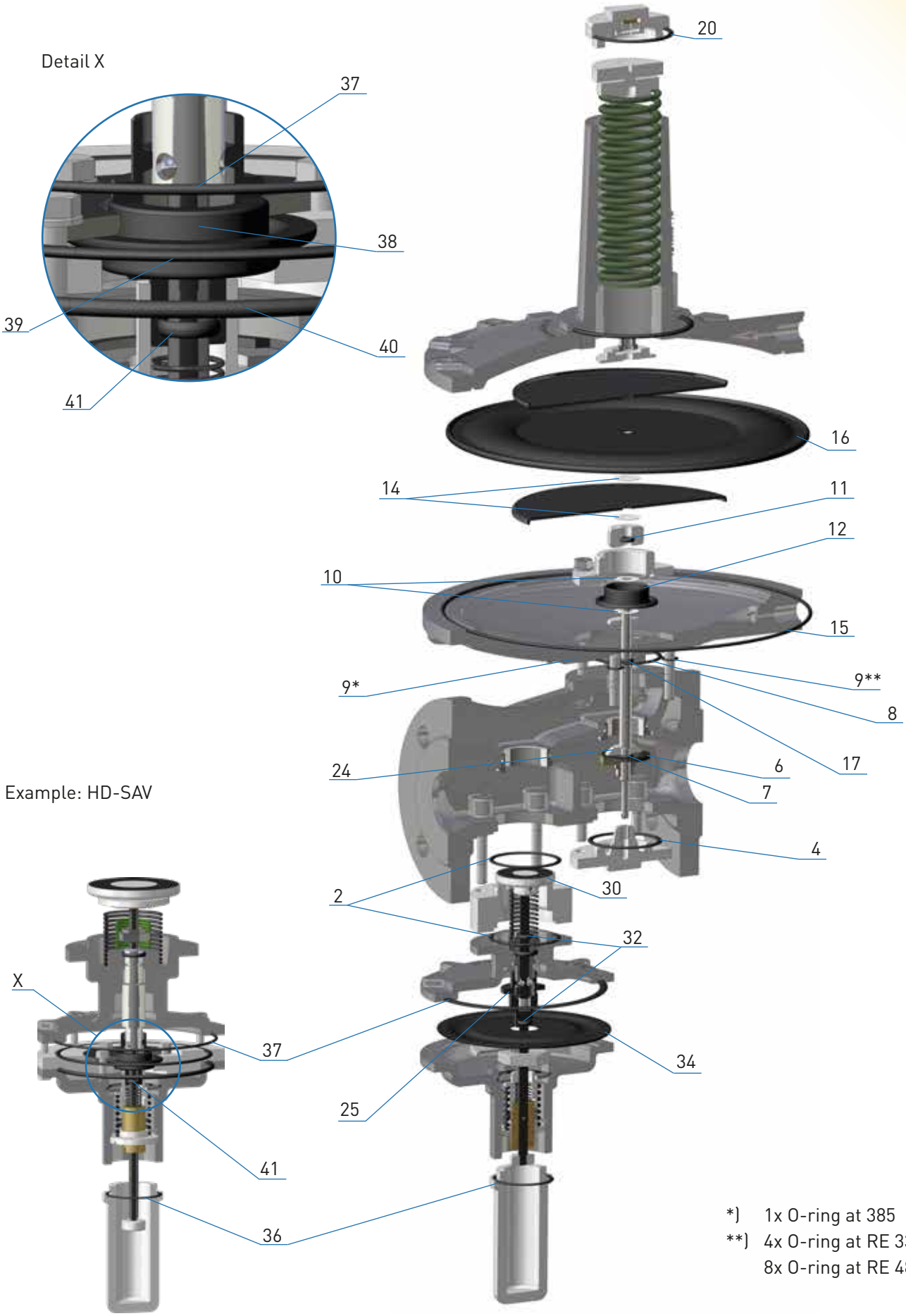

*) 1x O-ring at 385
**) 4x O-ring at RE 330 / 390
8x O-ring at RE 485

Fig. 11.1

© 11.2023_04

11.2 Optional Spare Parts Drawing

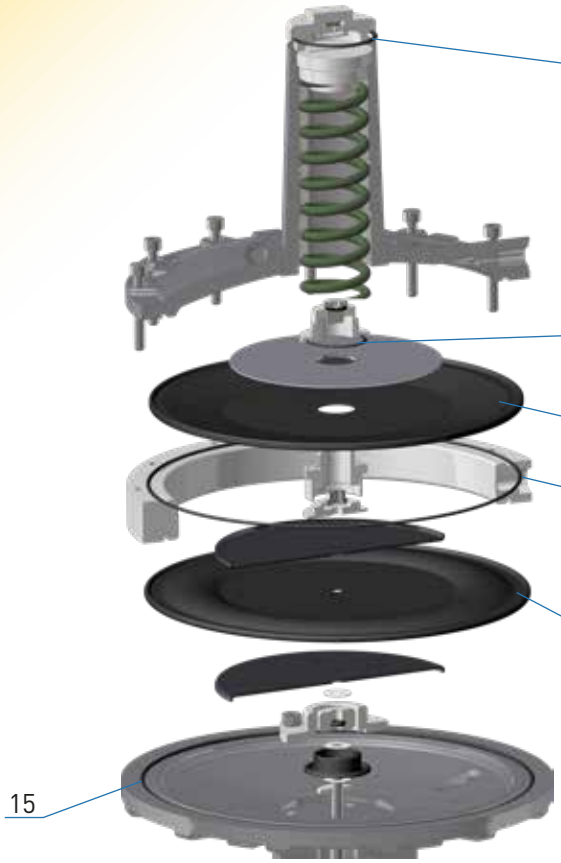

Fig. 11.2

RS 254 / 255 shown with safety diaphragm (version 1)

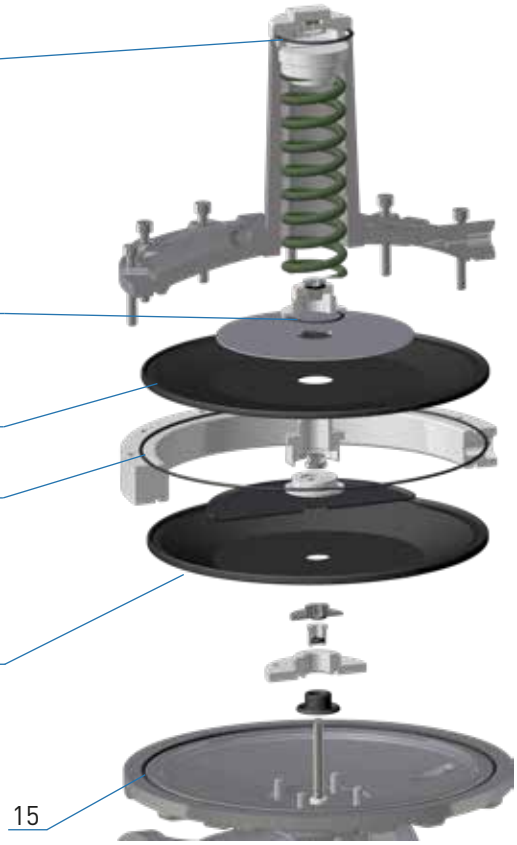

Fig. 11.3

RS 254 / 255 shown with safety diaphragm (version 2)



Fig. 11.4

RS 254 / 255 shown with noise reduction

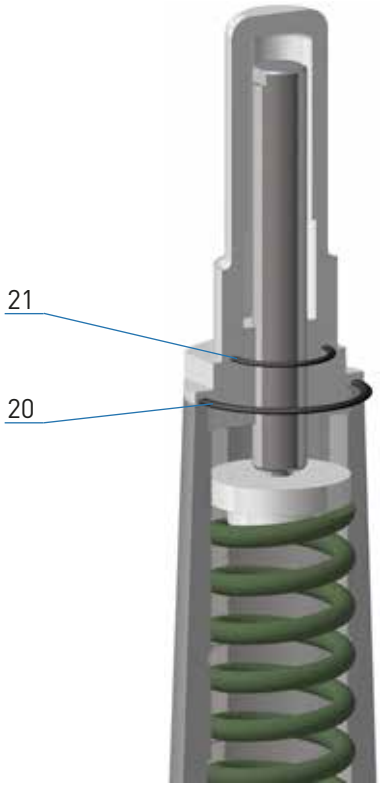

Fig. 11.5

RS 254 / 255 shown with HDS high-pressure screw spindle

© 11.2023_04

11.3 Parts for Maintenance Work

Main diaphragm and O-ring

Item no.	Name	Quantity pcs.	RS 254 / 025 RS 254 / 050			RS 254 / 080; RS 254 / 100; RS 255 / 050 RS 255 / 080; RS 254 / 150; RS 255 / 100; RS 254 / 200				
			RE 160	RE 205	RE 330	RE 205	RE 275	RE 385 / RE 390 MB	RE 385 / RE 390 GMB	RE 485
15	O-ring	1		O-029	O-033	O-029	O-041	O-042	O-042	O-043
	O-ring	1			O-054					
16	Diaphragm	1	M-111	M-121	M-141	M-122	M-132	M-152	M-162	M-172
Main diaphragm set (version 1) order number:			**M-111**	**MS-121**	**MS-141**	**MS-122**	**MS-132**	**MS-152**	**MS-162**	**MS-172**
15	O-ring	1		O-029	O-033	O-029	O-041	O-042	O-042	O-043
	O-ring	1			O-054					
16	Diaphragm	1	M-112	M-122	M-142	M-122	M-132	M-152	M-162	M-172
Main diaphragm set (version 2) order number:			**M-112**	**MS-122**	**MS-142**	**MS-122**	**MS-132**	**MS-152**	**MS-162**	**MS-172**

Intermediate diaphragm

Item no.	Name	Quantity pcs.	Valve	RS 254 / 025 RS 254 / 050	RS 254 / 080 RS 254 / 100 RS 255 / 050	RS 255 / 080	RS 254 / 150 RS 255 / 100	RS 254 / 200
12	Diaphragm	1	17.5	**M-001**				
			27.5	**M-002**	**M-003**			
			32.5	**M-004***	**M-005**	**M-005**		
			42.5		**M-006**	**M-007**	**M-007**	
			52.5		**M-008****	**M-009**	**M-009**	
			65			**M-010**	**M-010**	
			85			**M-011**	**M-011**	
			95				**M-012**	**M-012**
			115					**M-013**

Valve plate

Item no.	Name	Quantity pcs.	Valve	RS 254 / 025 RS 254 / 050	RS 254 / 080 RS 254 / 100 RS 255 / 050	RS 255 / 080	RS 254 / 150 RS 255 / 100	RS 254 / 200
6	Valve plate	1	17.5	**VT-001**				
			27.5	**VT-002**	**VT-003**			
			32.5	**VT-004***	**VT-005**	**VT-005**		
			42.5		**VT-006**	**VT-006**	**VT-006**	
			52.5		**VT-007****	**VT-007**	**VT-007**	
			65			**VT-008**	**VT-008**	
			85			**VT-009**	**VT-009**	
			95				**VT-010**	**VT-010**
			115					**VT-011**

*) only for RS254 / 050 **) only for RS254 / 100 and RS255 / 050

© 11.2023_04

Valve Plate SSV / Diaphragm SSV

Item no.	Name	Quantity	Exception	RS 254 / 025 RS 254 / 050	RS 254 / 080 RS 254 / 100 RS 255 / 050	RS 255 / 080	RS 254 / 150 RS 255 / 100	RS 254 / 200
30	Valve plate	1		**VT-201**	**VT-202**	**VT-206**	**VT-208**	**VT-210**
34	Diaphragm	1		**M-201**	**M-201**	**M-201**	**M-202**	**M-202**
38	Diaphragm	1	only for HD-SSV	**M-014**	**M-014**	**M-014**	**M-015**	**M-015**

O-Ring and Sealing Ring Sets

Item no.	Name	Quantity pcs.	Exception	RS 254 / 025 RS 254 / 050	RS 254 / 080 RS 254 / 100 RS 255 / 050	RS 255 / 080	RS 254 / 150 RS 255 / 100	RS 254 / 200
2	O-ring	1		O-014	O-018	O-036	O-044	O-046
		2	DN 50	O-014				
		2	before 1992			O-036		
4	O-ring	1		O-014	O-018	O-037	O-044	O-046
7	O-ring	1		O-007	O-009	O-009	O-009	O-009
8	O-ring	1		O-014	O-035	O-038	O-026	O-026
			RE 330	O-004				
9	O-ring	1		O-019	O-039	O-040	O-031	O-031
		4	RE 330	O-002				
			RE 390		O-002			
		8	RE 485				O-003	O-003
10	NBR ring	2		N-001	N-002	N-002	N-002	N-002
			Valve 27.5		N-001			
			Valve 17.5	NO NBR-RING				
11	O-ring	1		O-007	O-009	O-009	O-009	O-009
			Valve 27.5		O-007			
14	NBR ring	2		N-001	N-003	N-003	N-003	N-003
17	O-ring	1		O-008				
20	O-ring	1		O-015	O-015	O-036	O-036	O-036
			Cast sealing cap	O-014	O-014	O-015	O-015	O-015
21	O-ring	1		O-012	O-012	O-016	O-016	O-016
24	O-ring	1		O-007	O-009	O-009	O-009	O-009
25	O-ring	1		O-001	O-001	O-001		
32	O-ring	2		O-007	O-007	O-007	O-009	O-009
36	O-ring	1		O-013	O-013	O-013	O-014	O-014
37	O-ring	1		O-052	O-052	O-052		
O-ring set order number:				**OS-001**	**OS-002**	**OS-003**	**OS-004**	**OS-005**
O-ring set order number (for actuator with HD-SSV):				**OS-301**	**OS-302**	**OS-303**	**OS-304**	**OS-305**

© 11.2023_04

Safety diaphragm

Item no.	Name	Quantity pcs.	RS 254/ 025 RS 254 / 050		RS 254 / 080; RS 254 / 100; RS 255 / 050 RS 255 / 080; RS 254 / 150; RS 255 / 100; RS 254 / 200			
			RE 205	RE 330	RE 205	RE 275	RE 385 / RE 390	RE 485
22	O-ring	1	O-029	O-033	O-029	O-041	O-042	O-043
	O-ring	1		O-054				
23	Diaphragm	1	M-123	M-143	M-123	M-133	M-163	M-173
26	O-ring	1	O-013	O-013	O-013	O-013	O-013	O-013
Safety diaphragm set order number:			**MS-123**	**MS-143**	**MS-123**	**MS-133**	**MS-163**	**MS-173**

Spare Part Order Example:

Designation:	Type	DN - Nominal width	RE - Diaphragm assembly	D - Nozzle (valve diameter)	SSV Control device	Main diaphragm	Option
Gas pressure regulator:	RS254	080	390*	27.5	MD-R	MB*	SM...

Spare parts according to tables in 11.3

Main diaphragm and O-ring: **MS-152**
Intermediate diaphragms: **M-003**
Valve plate: **VT-003**
Valve plate SSV: **VT-202**
Diaphragm SSV: **M-201**
O-ring and sealing ring set: **OS-002**
Safety diaphragm: **MS-163**

Note

The allocation of individual parts is done according to the item no. in the tables in 11.3, conforming to the spare parts drawings in 11.1. and 11.2.

When ordering, please specify the fabrication no. shown on the nameplate.

Note

Example: Composition of the fabrication no.:

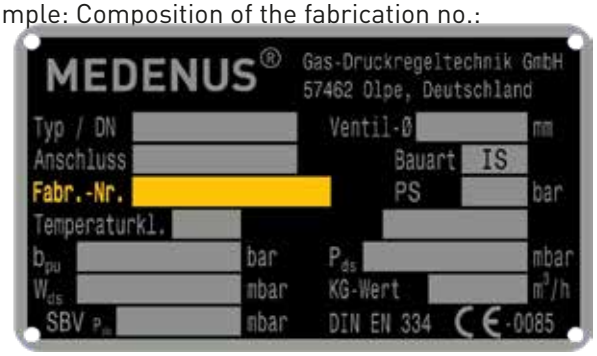

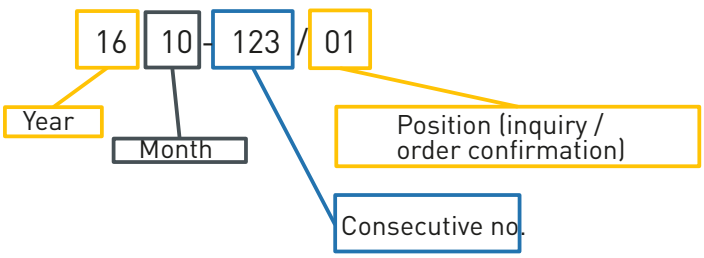

Spare parts must only be replaced by trained and authorized persons.

ATTENTION

*) When selecting the main diaphragm set for control device RE 385 / 390, a distinction has to be made between MB and GMB. The GMB diaphragm is standard equipment and is therefore not mentioned separately in the controller designation.

© 11.2023_04

Notes

© 11.2023_04

12 Accessories / Options

12.1 Noise Reduction



12.1.1 Use

- Gas pressure regulators RS 250 / RS 251
- Gas pressure regulators RS 254 / RS 255
- Gas pressure regulators RS 254 / RS 255
- Gas pressure regulators R101

12.1.2 Application / Function

The noise reduction made of metallic foam is inserted into the housing of the gas pressure regulator between the valve seat and the housing cover and reduces noise in the gas pressure regulator produced by the flow rate by up to -15 dB (±3 dB).

12.1.3 Mounting

- Unscrew the cover
- Slide the noise reduction (metallic foam) over the spindle and the valve plate until it makes contact with the valve seat.
- Screw down the cover again, thus pressing the noise reduction firmly against the valve seat*



© 11.2023_04

12.1.4 Determination of the sound pressure level L_A

The noise of gas expansion at a maximum flow rate of approx. 65 m/s on the outlet side is shown.

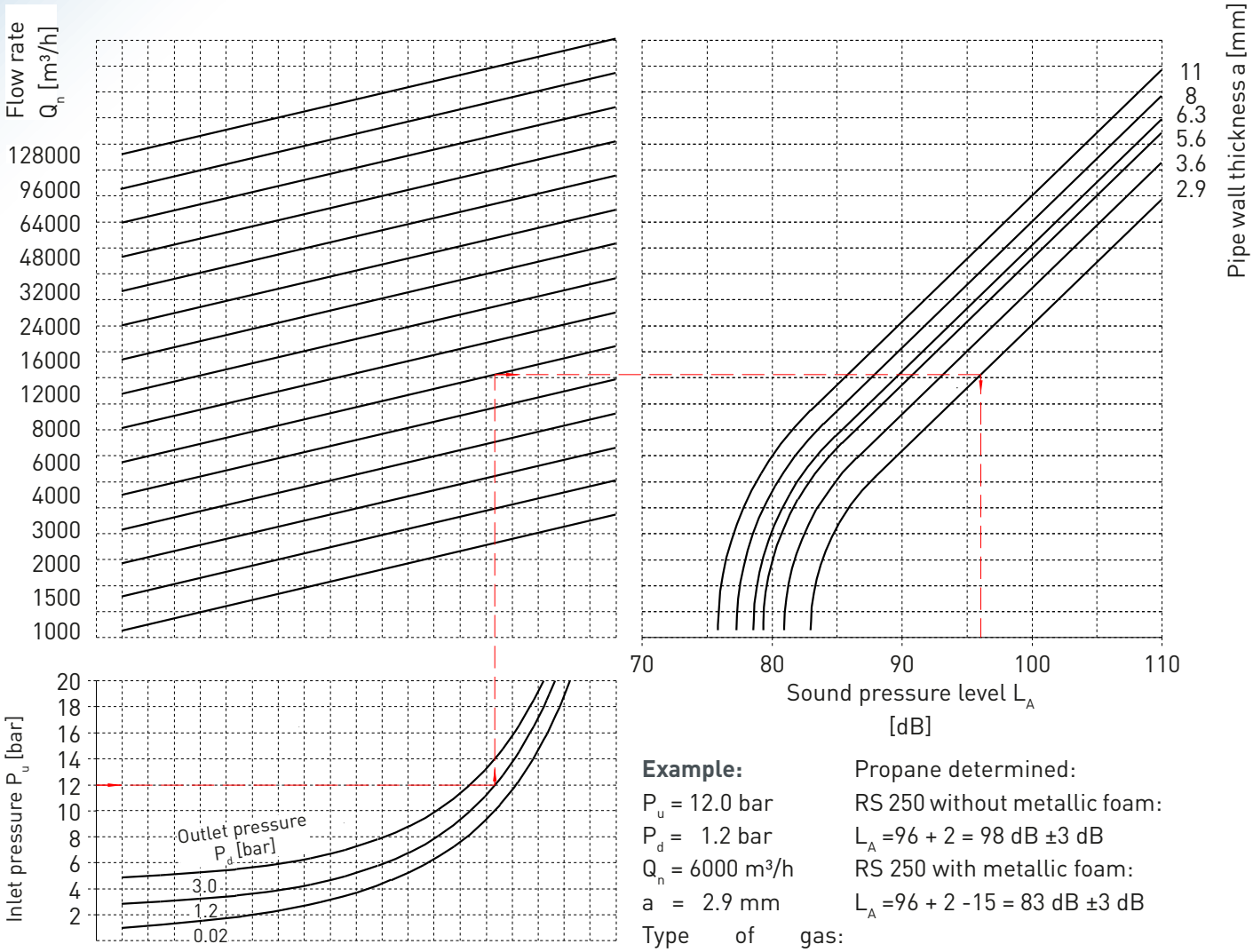

Example:

P_u = 12.0 bar
P_d = 1.2 bar
Q_n = 6000 m³/h
a = 2.9 mm
Type of gas: Propane determined:
RS 250 without metallic foam:
L_A =96 + 2 = 98 dB ±3 dB
RS 250 with metallic foam:
L_A =96 + 2 -15 = 83 dB ±3 dB

Reference site: Outlet of the gas pressure regulator, lateral distance 1m
Accuracy: ±3 dB
Correction factor for metallic foam design: ΔL_A up to -15 dB

Correction factors for some gases and gas mixtures

Gas, gas mixtures	ΔL_A [dB]
Acetylene	0
Natural gas	0
Helium	-5.5
Air	+1
Methane	0
Propane	+2
Hydrogen	-9

© 11.2023_04

12.2 High-Pressure Spindle



12.2.1 Use

- Gas pressure regulators RS 250 / RS 251
- Gas pressure regulators RS 254 / RS 255
- Gas pressure regulators R 100 / R 100-U
- Gas pressure regulators R101

12.2.2 Application / Function

The HDS high-pressure spindle is used for simplified adjustment of the control spring in the gas pressure regulator. For the adjustment of particularly strong control springs, the use of a high-pressure spindle is mandatory. (See p. 16 - 17.)

12.2.3 Mounting

- Unscrew the sealing cap
- Unscrew the setting screw anticlockwise
- Take off the spring plate from the spring
  Attention! Do not lose the steel ball!
- Remove the built-in spring
- Insert a new spring
- Insert spring plate again
  Attention! Do not forget the steel ball!
- Screw high-pressure cap with high-pressure spindle into the spring dome

  Do not forget the O-ring!
- On the widths across flats (AF 17) of the spindle, set the regulator to the desired output pressure.
- Screw on the sealing cap
  Do not forget the O-ring!

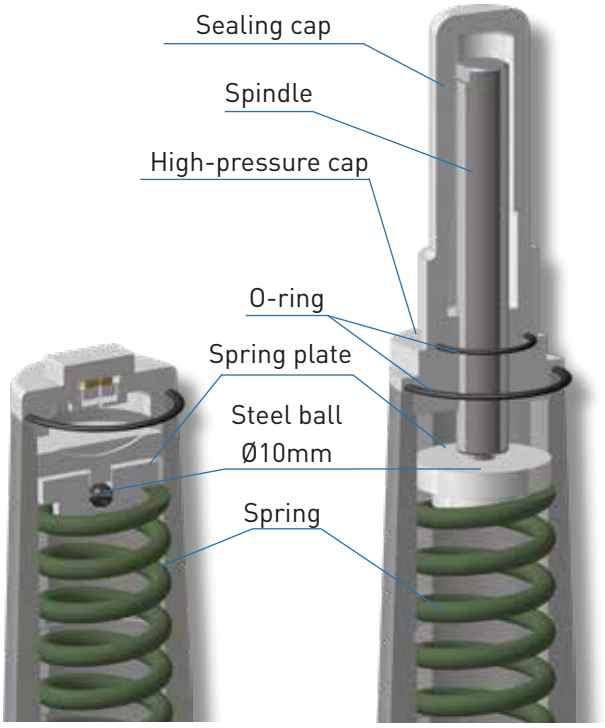

Standard model HD spindle design

12.2.4 Mounting instructions

- **Setting with HD spindle (small spring dome / Ø 70mm)**
  - Screw-in depth T min: 111 mm
  - Screw-in depth T max: 65 mm
- **Setting with HD spindle (large spring dome / Ø 105mm)**
  - Screw-in depth T min: 130 mm
  - Screw-in depth T max: 70 mm
- **Dismounting height HD spindle (small spring dome / Ø 70mm)**
  - X: 260 mm
- **Dismounting height HD spindle (large spring dome / Ø 105mm)**
  - X: 410 mm

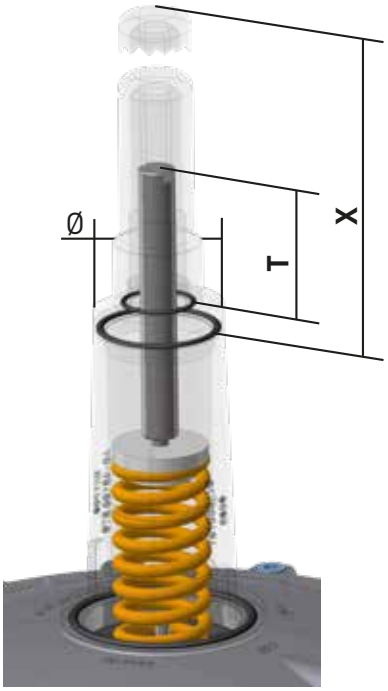

ATTENTION All threads must be oiled!

© 11.2023_04

12.3 AV 530 breather valve

12.3.1 Use

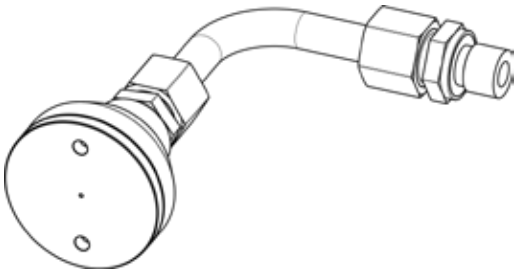

- On SSV control devices
- On regulators (pilots)
- With low-dynamic regulation sections (one full stroke)
- On the SRV

(Option not available for hydrogen version H_2)

12.3.2 Application / Function

The breather valve is used as replacement for the costly and time-consuming laying of breather lines and for securing the installation room against inadmissible escape of gas from diaphragm comparator compartments of gas pressure regulators and safety shut-off valves.

Safety shut-off valves (SSV) of functional class A are triggered automatically and seal gas-tight.

In compliance with EN 12186:2014, the use of the AV guarantees that in case of a defect of the working diaphragm, escape of gas from the breather connection of the gas pressure regulator or of the safety shut-off valve of more than 30 l/h is prevented.

12.3.3 Technical Data

- **Type** AV
- **Max. allowable pressure PS** 25 bar
- **Max. operating pressure p_{max}** 25 bar
- **Max. allowable flow rate** 30 l/h
- **Connection type** Male thread G 1/4"
- **Temperature range class 2** (operating/ambient temperature) -20 °C to +60 °C

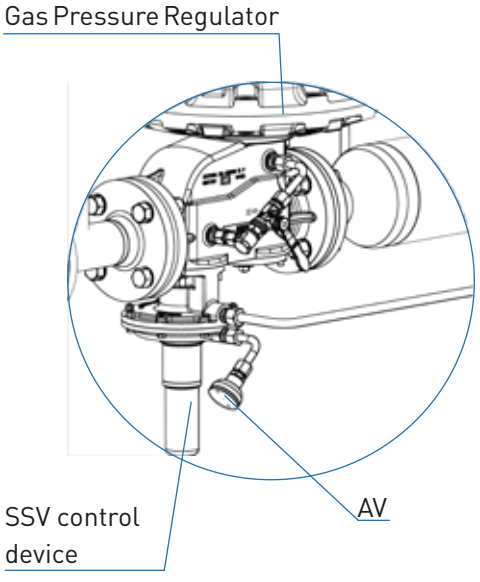

Application example on the SSV

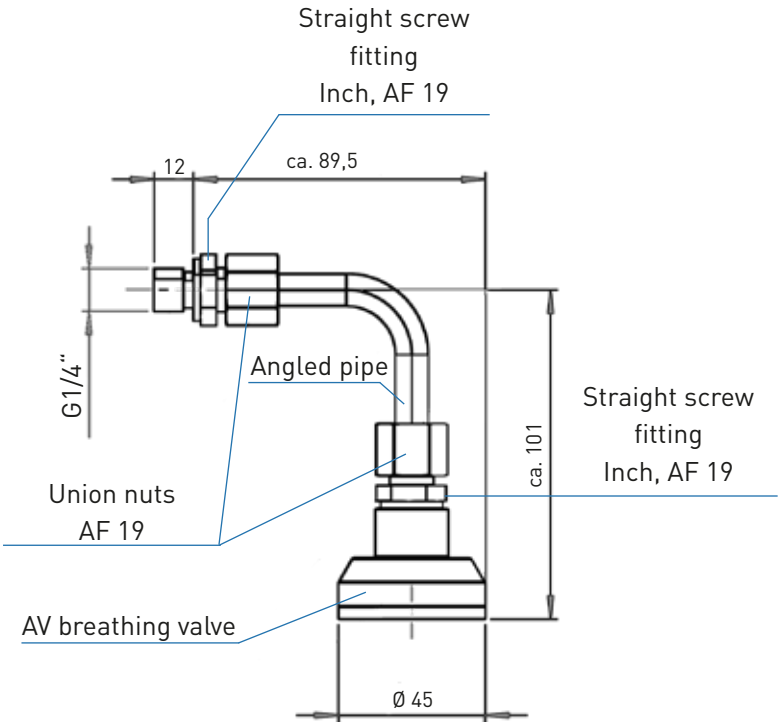

© 11.2023_04

12.4 RSD3 Restrictor Valve



12.4.1 Use

- For installation in the measuring line or breathing line of the control device

12.4.2 Application / Function

- For the finer adjustment of the control behavior of the regulator
- For a outlet pressure control without fluctuations in the low load range of the regulators

The RSD3 is a throttle valve which regulates the volume flow in the measurement line by means of a continuously adjustable cross-sectional reduction. The setting is made tool-free by means of a rotary knob and can be adjusted using a screw to be fixed. The throttle valve cannot be completely shut off, therefore a guaranteed minimum flow is ensured.

12.4.3 Technical Data

- **Type** RSD3
- **Max. allowable pressure PS** 25 bar
- **Max. operating pressure p_{max}** 25 bar
- **Connection type** on both sides G 1/4“
  Female thread
- **Material** corrosion-resistant steel
- **Temperature range, class 2** -20°C to +60°C
  (operating/ambient temperature)
- **Ex protection**
  The mechanical components of the device do not have any potential ignition sources of their own and are thus not covered by the scope of ATEX 2014/34/EC.

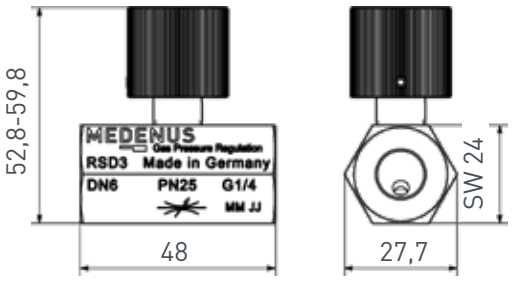

12.4.4 Application example

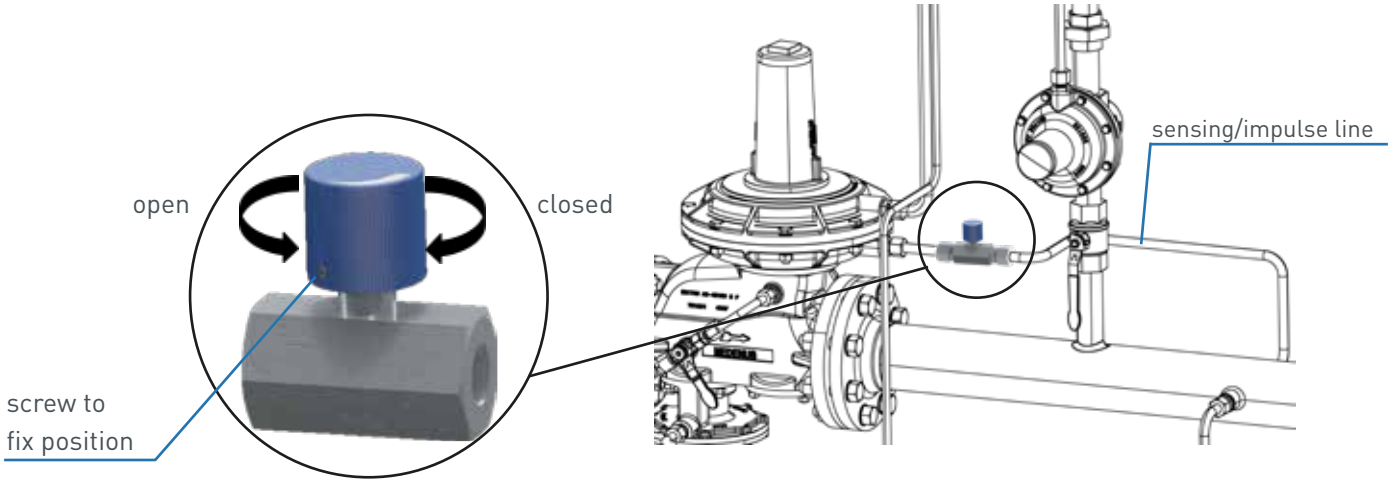

© 11.2023_04

12.5 Signal Transmitter / Reedcontact

12.5.1 Use



- On SSV-Control Devices

12.5.2 Application / Function

The signal transmitter is used in conjunction with Medenus GmbH-products to monitoring the position of the safety shut-off valve (closed or open position) by means of a remote display.
A built-in neodymium magnet in the pull knob of the SSV and a set switching distance to the reed contact allow the position of the SSV to be sensed by teh sensor. The signal is transmitted via remote display.
If the SSV switches into the closed position, the switching distance is exceeded and the sensor will lose the signal. This guarantees continuous monitoring of the SSV control device.

12.5.3 Technical Data

Signal transmitter mode	**MR500A**
• Electrical Design	NAMUR
• Output function	Normally open
• Dimensions (mm)	30,5 x 5 x 6,5
• Weight (g)	91,2
• Ambient temperature (°C)	-25...70
• Protection	IP 65; IP 67
• Mounting	flush mountable
• Cylinder type	T-slot cylinder
• Display switching status	1 x LED, yellow
• Connection to switching amplifiers	yes
• Switching amplifiers	Connection to certified intrinsically safe circuits with the max. values: U=15 V / I=50 mA / P=120 mW
• Nominal voltage DC (V)	8,2
• Current consumption (mA)	Target not detected ⩽ 1: Target detected ⩾ 2,2
• Protection class	III
• Reverse polarity protection	yes
• Short-circuit protection	no
• Overload protection	no
• Response sensitivity (mT)	2,1
• Travel speed (m/s)	10
• Hysteresis (mm)	1
• Repeatability (mm)	< 0,2

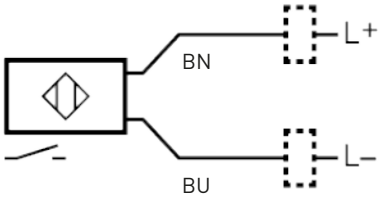

Core colours:
BN= brown
BU= blue

- Max. fall time (ms) 0,1
- Max. switch time incl. bounce 0,6
- Approval BVS 09 ATEX E164; IECEx BVS 09.0065

ATEX marking:

- Ex II 1G Ex ia IIC T4 Ga
- Ex II 1D Ex ia IIIC T135°C Da

- EMC:

EN 61000-4-2 ESD	- kV CD / 8 kV AD
EN 61000-4-2 HF radiated	10 V/m
EN 61000-4-4 Burst	2 kV
EN 61000-4-6 HF conducted	10 V
EN 55011 emission	class B

- MTTF (years) 21140
- Max. internal capacity (nF) 10
- Max. internal inductance (µH) 400
- Material housing: PA
- Material fastening clamp: stainless steel

Remark: No LED function in case of polarity reversal in DC operation

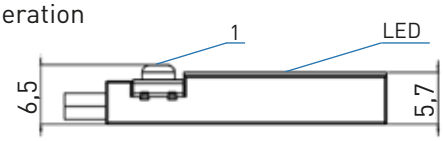

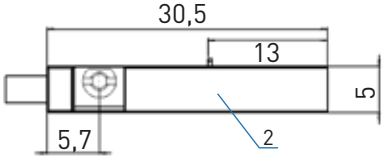

1 Fastening clamp with combined slot / Hexagon socket head AF 1,5
2 Sensing face

Source: ifm electronic GmbH - EN-GB-MR500A-25.02.2010

© 11.2023_04

12.5.4 Mounting

- Replace the pull knob of the SSV spindle with the pull knob with the neodymium magnet
- Slide the signal transmitter into the groove oft he SSV cap when SSV is open
- As soon as the operating indicator lights up: STOP! Assembly point has been reached.
- Fix the signal transmitter to the mounting point using a fine screwdriver or Allen key AF 1,5
- Perform a functional test: If the SAV cap is removed, the operating indicator must go out.

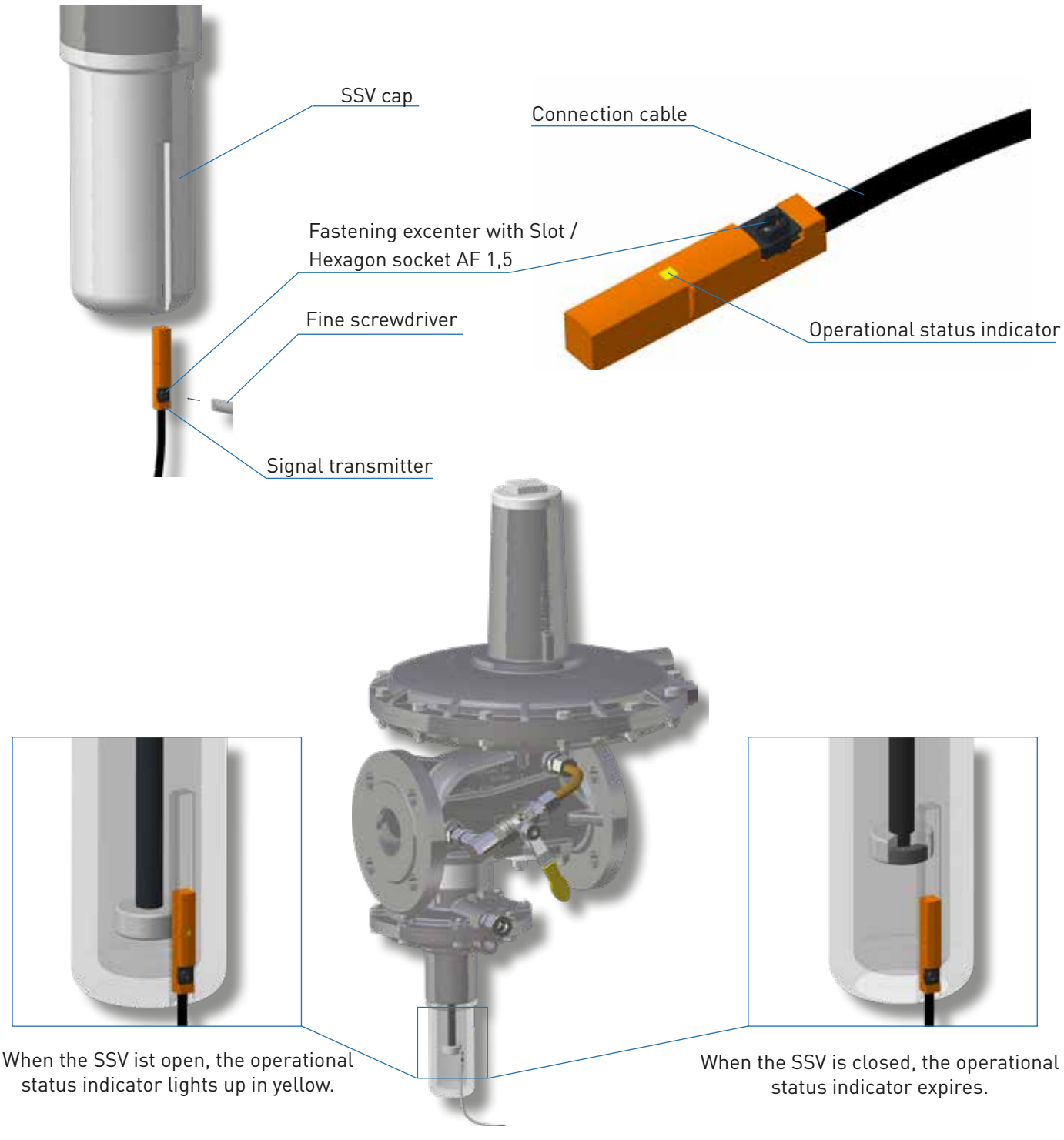

© 11.2023_04

12.5.5 Safety instructions

Must be read prior to using the neodymium magnet!
Important safety instructions for general and responsible handling of the neodymium magnet

Please pass on these instructions to all employees, customers and other people who are handling our products or parts derived from them.
Please read these instructions carefully before using the neodymium magnets. For any further questions, please feel free to contact us.
The company "magnets4you GmbH" shall not assume any liability for damage caused by improper handling of the magnets.

Hazards caused by magnets





Risk of injury caused by crushing
Risk of injury caused by splinters
Hazards caused by magnetic fields
Pacemakers, magnetic data carriers (credit cards, memory cards, etc.)
Electronic devices (mobile phones, computers, monitors, etc.)
Risk of fire
Health risks in contact with foods and drinking water

Handling

Do not place any iron-containing parts (tools, nails, knives, etc.) in the vicinity of the magnets.
Magnets can collide or adhere to other metallic surfaces, possibly resulting in splinters or brittleness.
Wear safety goggles and protective gloves – in order to avoid eye injuries and crushing!
Persons wearing pacemakers must not be exposed to magnetic fields.
Electronic devices and magnetic data carriers must be kept away from magnetic fields.
Magnets should not be processed mechanically, sawed or drilled.
The resulting drilling/magnet dust is extremely flammable.
Alternatively, magnets can be glued / sunk for fastening.
Keep the magnets away from open heat and flames!
The magnets are provided with a thin coating (nickel, gold or zinc) that can be removed or changed by excessive use.

It is recommended never to use AlNiCo magnets in direct contact with foods, since metal ions can dissociate in water-containing media.

Transport

When shipping magnets, the current regulations for scattered magnetic fields during air transport must be observed (IATA Hazardous Goods Regulations).
These regulations also apply to built-in magnets.

Neodymium magnets and end products prepared from them may not be imported directly or indirectly to the following countries: USA, Canada and Japan.

Increased caution for children

Keep neodymium magnets out of the reach of children. Children are at risk of playing with the magnets, inserting them into sockets, swallowing them or their fingers getting caught!

Children under the age of 10 should not handle magnets at all.

Source: magnets4you GmbH / Safety instructions Use of neodymium magnets / URL http://www.magnet-shop.net / Last update: 11/2013

© 11.2023_04

12.6 Baffle Plate / Restrictor Plate



12.6.1 Use

- On regulators (pilots)

12.6.2 Application / Function

If the outlet pressure of the regulator varies too much, this can be remedied by installing restrictor and baffle plates in the breather line or the impulse (measurement) line.

A set of the restrictor and baffle plates is located in the sealing cap (item 7) on the spring cap (item 4) of the regulator.

12.6.3 Mounting

1. Remove the throttle and baffle plates by unscrewing the sealing cap (item 7) from the regulator and then the locking screw (item 8) from the sealing cap (item 7).

2. Installation of the restrictor plate in the breather line

   First the restrictor plate (item 9) is installed in the breather line.
   The restrictor plate is installed behind the Ermeto screw fitting (item 5) in the bore of the diaphragm hood top (item 3).

Screw the sealing cap (item 7) again onto the spring cap (item 4) and put the gas regulation section into operation again.
If the installation of the restrictor plate (item 9) has given the desired result, the outlet pressure no longer varies, and the regulator reacts as desired, continue with item 4. If it has given the desired result, continue with item 3.

The restriction must not make the regulator so sluggish that the SSV drops when starting or switching off the gas regulation section.

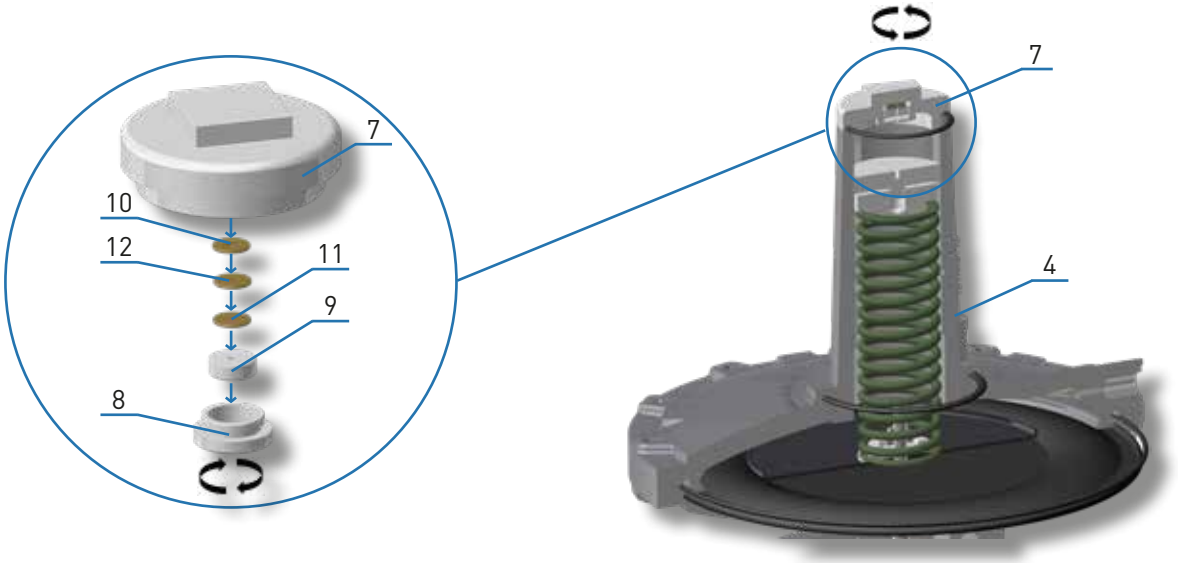

3. Installation of the baffle plates in the impulse line
   The regulator flow can be restricted by installing a baffle plate (items 10, 11 or 12) in the impulse line.
   To do so, the ball valve upstream of the gas pressure regulator must be closed, and the gas regulation section must be depressurized by discharging the gas to the atmosphere as prescribed (see operating manual). The baffle plate (item 10) is then installed in the impulse line between the Ermeto screw fitting (item 6) and the impulse line and screwed down again. The gas regulation section is then put into operation as specified (see operating manual).

© 11.2023_04

If the outlet pressure remains stable during operation and the regulator reacts as desired, continue with item 4.

If the outlet pressure still varies, the installation process of the baffle plate (item 11) can be repeated.
If this still doesn't give the desired result, the installation process can be repeated with the baffle plate (item 12).
If the outlet pressure remains stable during operation and the regulator reacts as desired, continue with item 4.

If this procedure is not successful, contact MEDENUS to find out other solution options.
The restriction must not make the regulator so sluggish that the SSV drops when starting or switching off the gas regulation section.

4. Put the baffle and restrictor plates that are not required back into sealing cap (item 7) and screw down the locking screw (item 8). Seal the spring cap (item 4) of the regulator as prescribed using the sealing cap (item 7). After completion of all of the work, a leakage test must be performed on the gas regulation section.

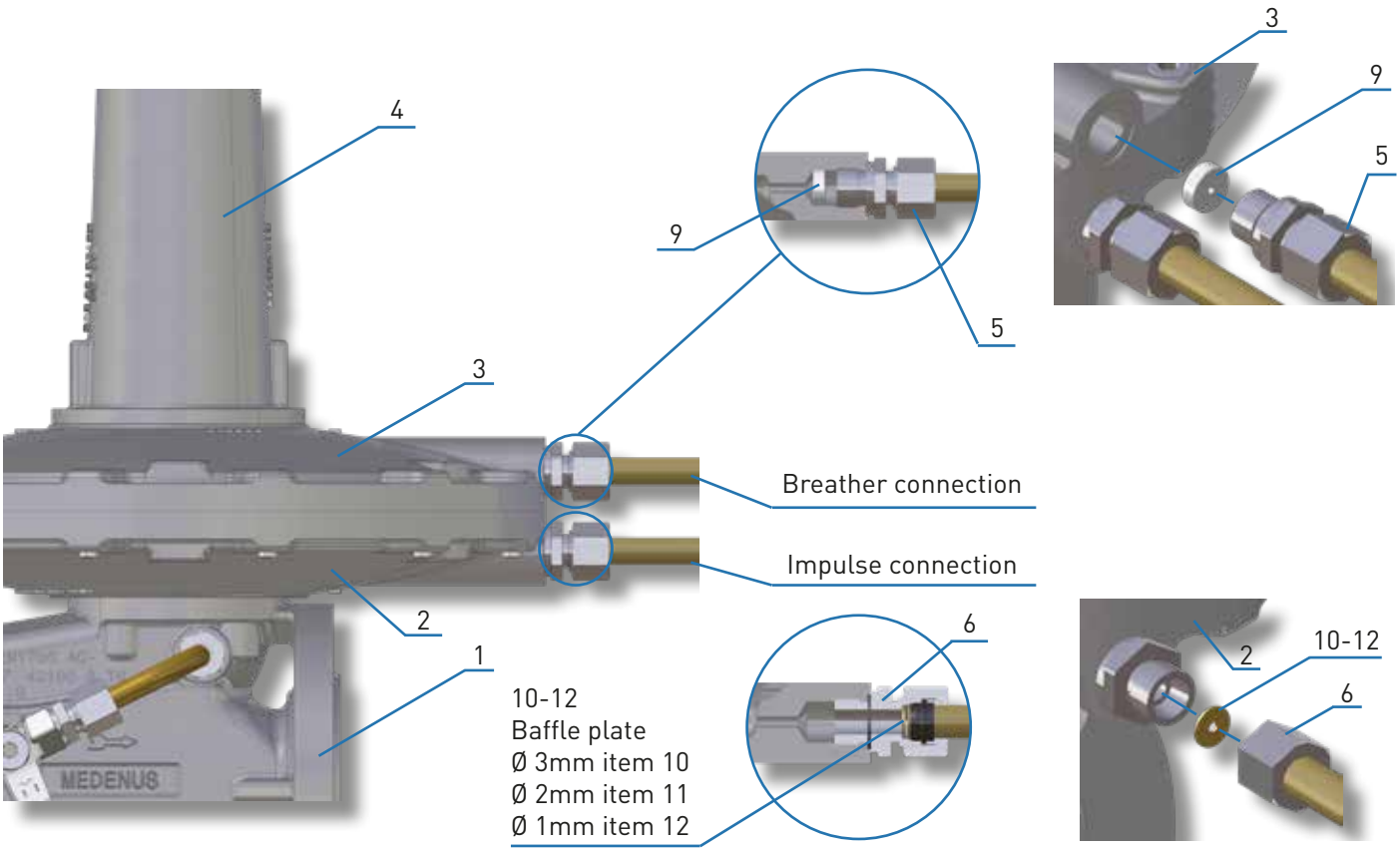

Legend

1. Housing
2. Diaphragm cover bottom
3. Diaphragm cover top
4. Spring cap
5. Ermeto screw fitting breather connection
6. Ermeto screw fitting pulse connection
7. Sealing cap
8. Lock screw
9. Restrictor plate
10. Baffle plate Ø 3mm
11. Baffle plate Ø 2mm
12. Baffle plate Ø 1mm

© 11.2023_04

12.7. SSV manual and remote release

12.7.1 Use



- On SAV control devices

12.7.2 Application / Function

The direct-acting solenoid valve is used as electromagnetic remote release for closing the safety shut-off valve. Only for SSV control devices of functional class A.
Cannot be used in conjunction with a breathing valve AV530 on SSV!

Upon being energized or in case of power failure, the valve closes the impulse line, resulting in the pressure falling below the response pressure to be monitored. As a result, the SSV actuator shuts off the gas flow gas-tight.

After being released, the safety shut-off valve can only be opened by hand and engaged in the open position.

12.7.3 Technical Data

• Housing material	stainless steel, polyamide (flange)
• Sealing material	FKM (EPDM upon request)
• Media	Neutral gases and liquids (e.g. compressed air, city gas, grid gas, water, hydraulic oil, petrol). Suitable for technical grade vacuum.
• Media temperature	-10° to +100 °C (PA coil) up to 120 °C epoxy
• Polyamid coil (FKM seal)	Coil
• Ambient temperature	max. +55 °C
• Viscosity	max. 21 mm^2/s
• Line connection	G 1/8, G 1/4, flange (SFB)
• Operating voltage	24 V DC, 24 V/50 Hz
•	(other voltages upon request)
• Voltage tolerance	±10%
• Nominal operating mode / Single valve	Permanent operation 100%
• Electrical connection	DIN EN 175301-803 form A for device socket
•	Type 2508 (see ordering table accessories)
•	ATEX/IECEx version potted with 3 m cable
• Installation position	Any, preferably drive pointing upwards
• Degree of protection	IP65 with device socket, ATEX/IECEx terminal connection version
•	and cable connection version
•	NEMA 4x with device socket 2508 or 2509
•	for VA versions (other versions upon request)
• Thermal insulation class coil	Polyamide class B (epoxy class H upon request)
• Coil material polyamide	(epoxy upon request)
• Nominal width	DN 1.5 - 2.5

Note

Further technical data and information on the 3/2-way valve, such as information on ATEX, are available for download on the manufacturer's homepage.

© 11.2023_04

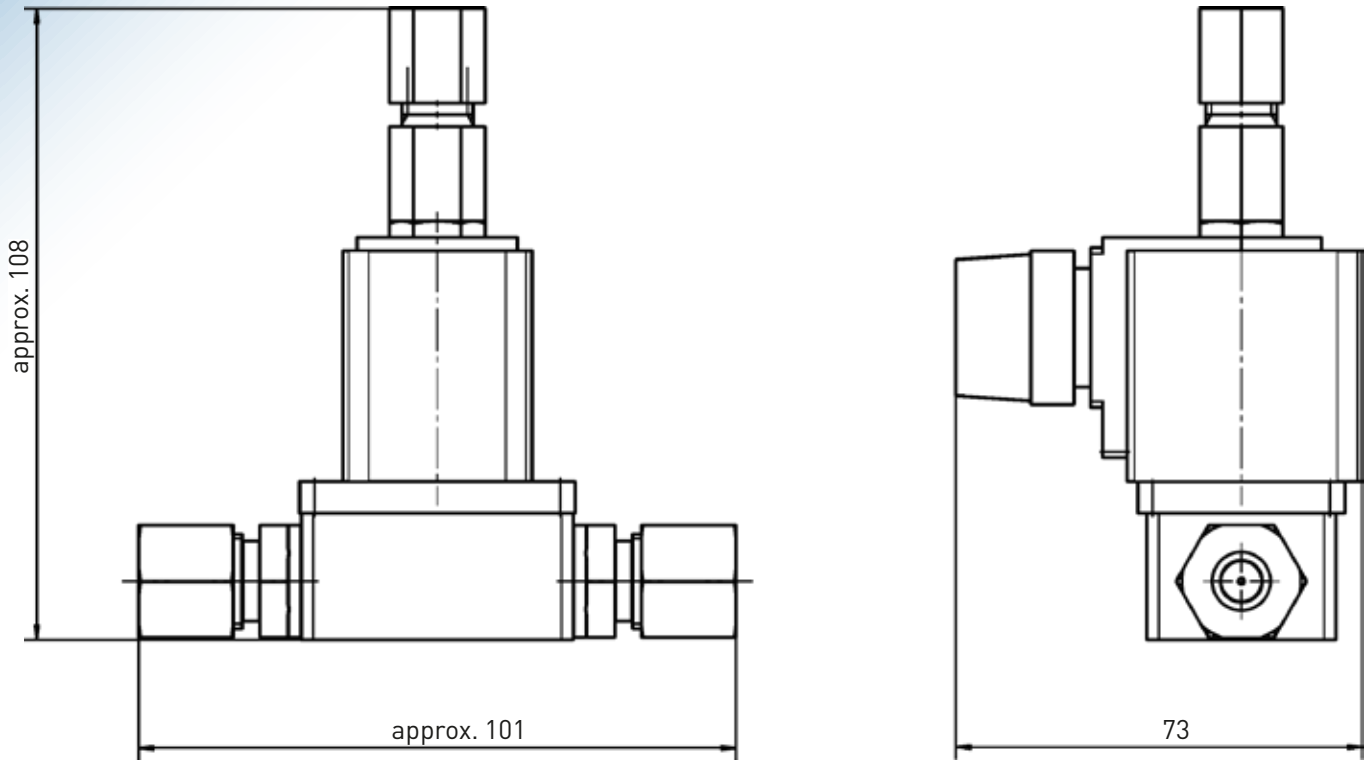

12.8.4 Application example

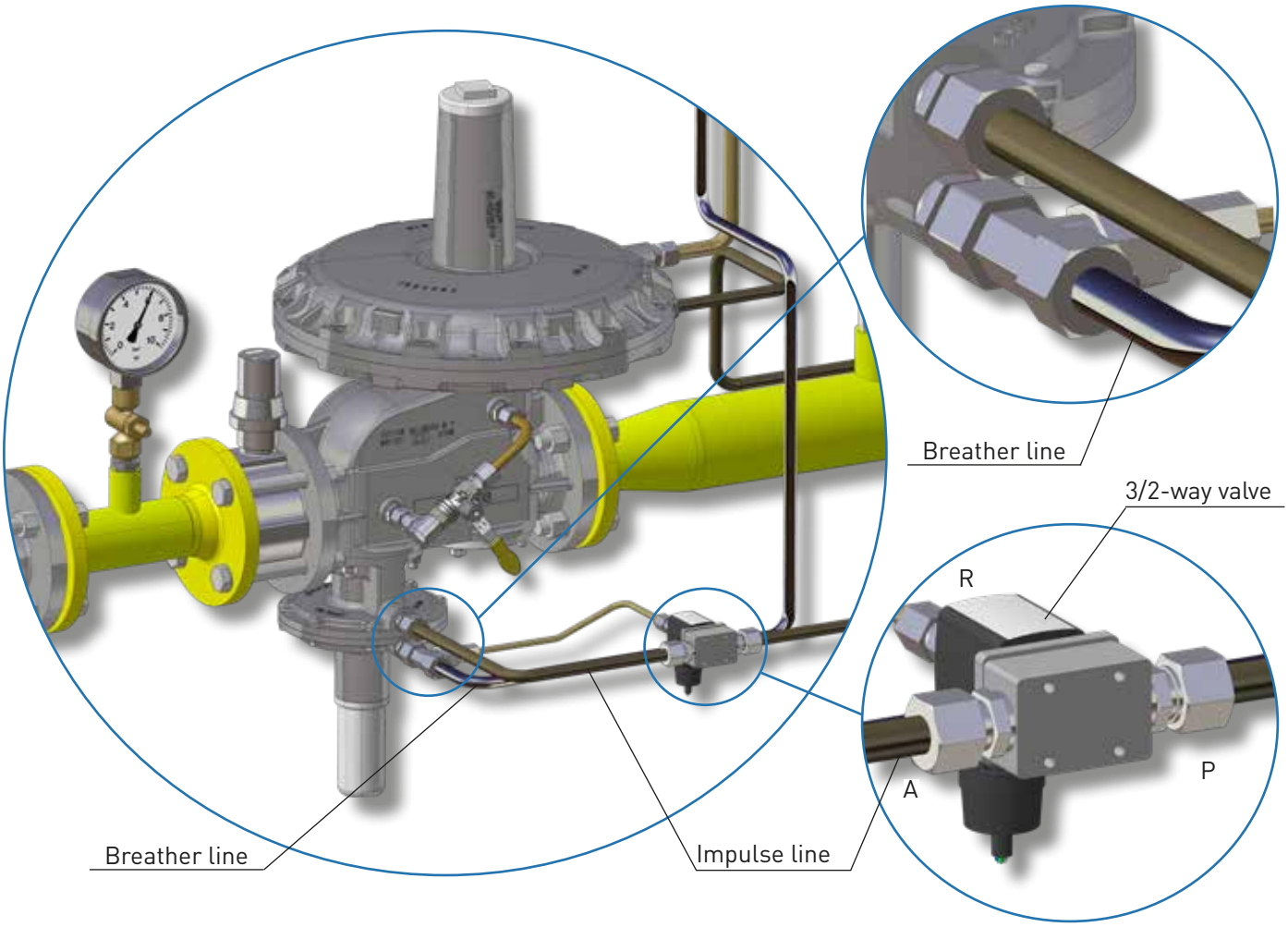

© 11.2023_04

12.8. SM Safety Diaphragm

12.8.1 Use



- Gas pressure regulators RS 250 / RS 251
- Gas pressure regulators RS 254 / RS 255
- Gas pressure regulators R 100 / R 100-U
- Gas pressure regulators R101

(Option not available for hydrogen version H_2)

12.8.2 Application / Function

In the model with safety diaphragm, the safety diaphragm is located above the main diaphragm. When the main diaphragm ruptures, the safety diaphragm makes contact with the top cover of the diaphragm assembly and prevents any inadmissible escape of gas into the surrounding atmosphere.

12.8.3 Application example

Gas pressure regulator RS250/DN080/385 with safety diaphragm

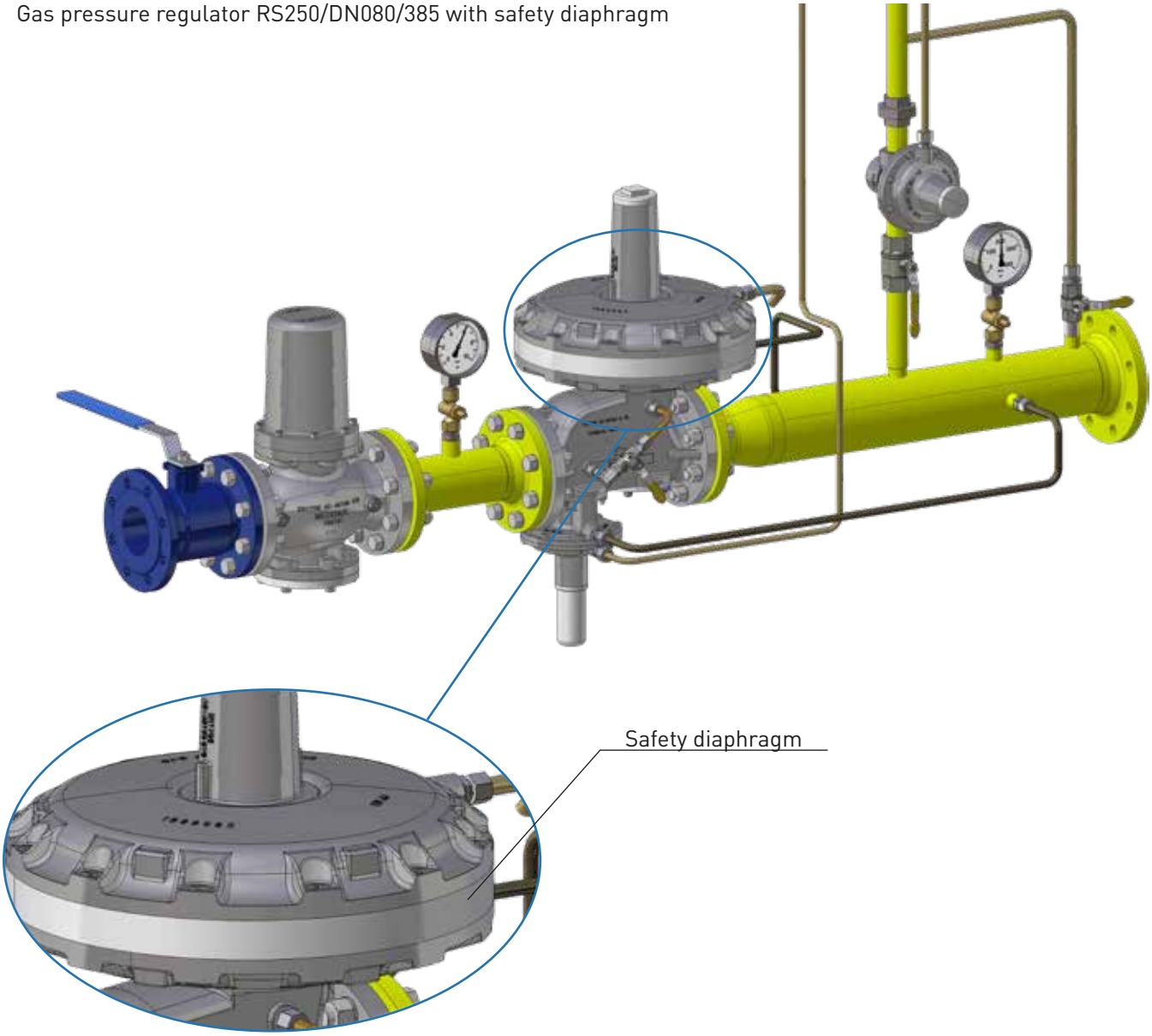

© 11.2023_04

13 Tools

13.1 Brace and bit with 4-jaw chuck



The 3.5 - 16 mm brace and bit with 4-jaw chuck and the accessories available for it are used for precise adjustment of the setpoint spring in your MEDENUS gas pressure regulator.

For further information for use and on the spring data of the setpoint springs, please refer to pages 12 - 13 "Initial commissioning / Recommissioning" and pages 14 - 15 "Diaphragm assembly setpoint spring table".

13.1.1 Accessories for brace and bit with 4-jaw chuck

Gedore screwdriver bit 1/2" slotted 18x2.5 mm



- Hexagon square drive to DIN 3120 - C 12.5, ISO 1174, with ball groove
- Hand-operated, with slip-proof cross knurling
- Chrome-plated
- With pressed-in pin made of GEDORE vanadium special steel, manganese-phosphatized
- Cutting blade to DIN ISO 2380-1 form B

Gedore extension 1/2" 76 mm



- Model to DIN 3123, ISO 3316
- For hand-operated socket wrench inserts with square drive to DIN 3120, ISO 1174, with ball detent
- GEDORE vanadium steel 31CrV3, chrome-plated

Gedore extension 1/2" 76 mm



- Model to DIN 3123, ISO 3316
- For hand-operated socket wrench inserts with square drive to DIN 3120, ISO 1174, with ball detent

- GEDORE vanadium steel 31CrV3, chrome-plated

13.2 SSV Tightening Tool

The tightening tool made of stainless steel is used for replacing the SSV diaphragm in your MEDENUS safety shut-off valve.



Old design

Old design
- Width across flats 22
- Stainless steel 42CrMo4



New design

New design
- Width across flats 32
- EN AW-2007 or similar

© 11.2023_04

Declaration of Conformity

Manufacturer: Medenus Gas-Druckregeltechnik GmbH
Address: Im Langen Feld 3
D-57462 Olpe

declares under sole responsibility that the products:
R 254 / RS 254 / RP 254 / RSP 254
R 255 / RS 255 / RP 255 / RSP 255

Gas Pressure regulator (spring-loaded proportional regulator), optionally with safety shut-off valve (SSV) for upper and lower shut-off pressure, and / or with pilot support, have been subjected to an EC-type examination and conform to the basic requirements of the directives
GAR (EU) 2016/426 EC-Gas Appliances Regulation and 2014/68/EU A III B EC-Pressure Equipment Directive in the respective current version.

Marking (PIN) according to Pressure Equipment Directive and Gas Appliances Regulation

CE-0085AQ0882 model R 254 / RS 254 / RP 254 / RSP 254
CE-0085AQ0883 model R 255 / RS 255 / RP 255 / RSP 255

Notified body (EU type examination: Module B)	DVGW CERT GmbH Josef Wirmer Straße 1-3 D-53123 Bonn, Germany Notified Body number: 0085

The basis of the EC type examination are the harmonized European standards and / or national standards, as well as the European directives and / or regulations:

2014/68/EU A III B EC Pressure Equipment Directive	(15.04.2014)
GAR (EU) 2016/426 A III B EC Gas Appliances Regulation	(09.03.2016)
DIN EN 334	(01.11.2019)
DIN EN 14382	(01.11.2019)

Monitoring of the EC quality assurance system (module D)	DVGW CERT GmbH Notified Body number: 0085

Registration No. Pressure Equipment Directive **SD-0085BQ0510**
Registration No. Gas Appliances Regulation **SE-0085BQ0510**

Olpe,
07.08.2023

Alexander Christiani
Managing Director

MEDENUS Gas-Druckregeltechnik GmbH
Phone +49 (0)2761 82788-0
Fax +49 (0)2761 82788-9
Im Langen Feld 3 / D-57462 Olpe
info@medenus.de
www.medenus.de

EN